Invitation

Arlington Public Schools
Procurement Office

Invitation to Bid 17FY20

Invitation to Bid Title:	**Jefferson Middle Gym Roof Replacement**
Invitation to Bid Number:	**17FY20**
Invitation to Bid Issue Date:	**February 27, 2020**
Pre-Bid Conference:	**March 05, 2020 (Refer to Invitation Title Page 2)**
Bid Closing Date/Time:	**March 23, 2020, Prior to 10:00 A.M. (Local Prevailing Time)**
Bid Opening Date/Time:	**Promptly Following Bid Closing**
Procurement Office Representative:	**Dyanna McMullen, CPPB, VCO, Senior Procurement Specialist (703) 228-7649, dyanna.mcmullen@apsva.us**

This is Arlington County School Board, operating as Arlington Public Schools ("APS" or "Owner") Invitation to Bid (ITB) #17FY20 for Jefferson Middle Gym Roof Replacement, located at 125 S. Old Glebe Road, Arlington, VA, 22204, (the "Project"). Sealed Bids must be received in hand and time stamped, or signed in, by a member of the APS Procurement Office (Procurement Office) prior to the date and time stated above (collectively the "Bid Closing") and will be opened and publicly announced promptly following expiration of the Bid Closing ("Bid Opening"). If the Bid Opening is to take place at a time and location other than where the Bids are to be received, that time and location will be announced upon expiration of the Bid Closing. Bidders are responsible for ensuring that the Procurement Office receives its Bid submission prior to the Bid Closing. The Procurement Office is located on the 4th Floor of the Syphax Education Center, 2110 Washington Blvd., Arlington, Virginia 22204 ("Syphax"). Bidders may be asked to sign in at the 4th Floor Reception Desk before being allowed to proceed to the Procurement Office. Bidders must allow sufficient time to clear the sign in process to complete the Bid submission process prior to Bid Closing. Visitor parking is available on Levels B1 and B2 of the parking garage.

Delivery to, or receipt by, any office other than the Procurement Office shall not be deemed receipt by the

Procurement Office until actually received in hand by a member of the Procurement Office. Bidders assume all risk of delivery to the correct office. The 4th Floor reception desk serves more than one APS department and receipt by the 4th Floor reception desk shall not be deemed receipt by the Procurement Office.

The time a Bid is received in the Procurement Office shall be determined by the time stamped on the Bid receipt by the time clock in the Procurement Technician's work station. In the event this time clock is not functioning; the time shall be determined by the time displayed on the atomic clock located in the Procurement Technician's work station. The time on the atomic clock will be written on the Bid receipt by hand by Procurement Office personnel**. Bids received after the Bid Closing shall not be considered.** If Syphax is closed for any reason at the scheduled time of the Bid Closing, the Bid Closing and the Bid Opening shall automatically be extended to the same time as originally stated on the next business day Syphax is open.

All Bids must be submitted on the enclosed pages bearing the caption Bid Form (collectively "Bid Form") or a copy thereof. For purposes of this requirement a "copy" is an exact duplicate of the Bid Form included in these Bid Documents reproduced in any manner with no modifications, additions, or deletions. All pages of the Bid Form must be submitted and all blanks in the Bid Form must be completed or noted as not applicable. A notation of "not applicable" or "N/A" shall be used only if the information requested is not a required or mandatory element of the Bid. A person authorized to bind the Bidder in contractual matters must sign the Bid Form. Mandatory provisions of this ITB are indicated by the inclusion of the words "shall" or "must" to identify the Bidder's obligations. Failure to comply with any requirement stated as mandatory either in this Invitation or in the Instructions to Bidders shall result in rejection of the Bid as non-responsive, except to the extent the failure or omission either is not a mandatory statutory requirement or does not affect price, quantity, quality or time.

Bid Documents:

Submission of a Bid is acceptance by the Bidder of all requirements of the Contract Documents if the Bidder is awarded the Contract. Terms used in this ITB shall have the same meaning as provided in the Contract Documents. The Contract Documents state the requirements of the Project with detail. Drawings and Specifications for this Project will be available electronically as PDF file format on the Owner's Representative (Architect's), Gale Associates, Inc, FTP site. Login and password information for the FTP site will be emailed to all interested General Contractors upon request. Please contact Owner's Representative (Architect), Steven J. Bolen via email at sjb@gainc.com and Sherre L. Bartlett at slb@gainc.com.

The Bid Documents for this solicitation consist of this Invitation, the Instructions to Bidders, the Scope of Services, all Addenda issued prior to the Bid Closing, and the Bid Form. The Contract Documents are as defined in the form Agreement included with this solicitation. All provisions of the Bid Documents and of the Contract Documents shall apply to this solicitation, and submission of a Bid shall be the Bidder's confirmation of the acceptance thereof and agreement to comply therewith.

Pre-Bid Conference:

A pre-Bid conference (Conference) will be held for this procurement on **March 05, 2020 at 9:30 A.M. (local prevailing time). The Conference will take place at the Jefferson Middle Gym located at, 125 S. Old Glebe Road, Arlington, VA, 22204 to discuss the Project and answer general questions. Attendance at the Conference is not mandatory but is strongly encouraged.** Bidders must report to the Main Office to sign in and will be directed to the room wherein the Conference will be held. Immediately following the Conference, Bidders will be given an opportunity to tour the existing school.

Minutes of the Conference, including but not limited to questions and answers presented at the Conference, will be issued in writing by the Procurement Office as an Information Item and distributed in the same manner as an Addendum, as set forth below

Bidder's Questions:
All questions regarding this solicitation, other than those submitted at the Conference, must be submitted in writing via email, addressed to Dyanna McMullen, Procurement Office, Senior Procurement Specialist, at dyanna.mcmullen@apsva.us, with copies to David Stash, Roofing Supervisor, at david.stash@apsva.us and Cathy Lin, Energy Manager and Stormwater, Program Administrator at cathy.lin@apsva.us and, Steven J. Bolen via email at sjb@gainc.com and Sherre L. Bartlett at slb@gainc.com Owner's Representative (Architect). Questions must be received by 5:00 P.M. local time, March 10, 2020.

The Procurement Office will issue written answers to all questions timely submitted. If a Conference is conducted, the Procurement Office will issue written answers to all questions raised at the Conference as an Information Item. Information Items shall be posted on www.apsva.us ("the APS website") and shall be posted on Virginia's online electronic procurement system ("eVA"). It is the responsibility of each Bidder to access this information.

Modification of the Bid Documents shall be accomplished only by a written Addendum issued by APS. If the answer to a question modifies the Bid Documents, it will be incorporated in and published as an Addendum. No answer to a question as an Information Item shall be deemed to be an Addendum.

Addenda:
The Bid Documents shall be modified only by written Addendum issued by APS.

All Addenda shall be deemed to be a part of the Bid Documents.

All Addenda shall be posted on the APS website and on eVA. It is the responsibility of each Bidder to access this information.

The Bidder shall identify on the Bid Form in the space provided all Addenda received by the Bidder and which are included in the Bid, or the Bidder can include a copy of all Addenda with its Bid. It shall be the responsibility of each Bidder to confirm prior to submission of a Bid that it has received all Addenda. Failure of a Bidder to in fact have done so shall not relieve the Bidder from the requirements of the Bid, including all Addenda issued. Failure to comply with this requirement does not automatically make a Bid non-responsive. By submitting a Bid, the Bidder agrees that it is bound by its Bid and that it will accept any Contract awarded even if it did not obtain all Addenda before submitting a Bid.

Information Items:
All questions received timely, including those at the Conference, shall be addressed by written Information Item.

The Bid Documents shall not be modified by an Information Item.

All Information Items shall be posted on the APS website and shall be posted on eVA. It is the responsibility of each Bidder to access this information.

Submission of Bids:
Bids must be received, and time stamped or signed in at the Procurement Office prior to the Bid Closing stated in the Invitation. The Procurement Office is located at:

Arlington Public Schools
Syphax Education Center
Procurement Office, 4th Floor
2110 Washington Blvd.

Arlington, Virginia 22204

Submission of Bids electronically or by facsimile will not be accepted.

The Bid Form, and all required additional documents referenced therein shall be submitted in a sealed, opaque envelope containing the following information on the outside of the envelope.

Bid in Response to Arlington Public Schools Invitation to Bid No. 17FY20
Bid Closing Date and Time
Bidder's Name as appearing on the Bid Form
Commonwealth of Virginia Class A Contractor's License Number
Contractor's License Expiration date

It is recommended that the mailing label, as found at Appendix A, is completed <u>and attached to the outside of the envelope</u>:

<u>Bid Closing and Opening</u>
The Bid Closing is March 23, at 10:00 A.M. (Local Prevailing Time). The Bid Opening will be held Promptly following Bid Closing at Syphax. Note: The Bid Closing and Bid Opening are in the same building but in different rooms.

<u>Project Description and Background</u>:

APS, is currently seeking Bids for the Project. The Contractor will be responsible for furnishing all tools, equipment, labor, materials, and miscellaneous items needed for a complete turnkey Project.

The Contractor's responsibilities are described in the Construction Documents.

Specifications:
https://www.apsva.us/wp-content/uploads/2020/02/ITB-17FY20-Specifications.pdf

Drawings:
https://www.apsva.us/wp-content/uploads/2020/02/ITB-17FY20-Drawings.pdf

<u>Negotiation Procedures in the Event the Apparent Low Bid Exceeds Available Funds</u>:
The Apparent Low Bid and the Apparent Low Bidder shall be the lowest responsive Bid from a responsible and qualified Bidder based upon the Total Base Bid as set forth in the Bid Form. If the Apparent Low Bid is within available funds, the Contract, if awarded, will be awarded to the Apparent Low Bidder for the entirety of the Work identified in the Contract Documents for the Total Base Bid, subject to such Modifications or which may arise subsequent to Bid Closing.

1. If the Apparent Low Bid is not within available funds, all responsive Bids from responsible and qualified Bidders will be reviewed and the deduct Bid Alternate in each Bid deducted from the Total Base Bid in each Bid to determine the lowest Net Total Base Bid. The Contract, if awarded, then will be awarded to the responsible and qualified Bidder submitting the lowest responsive Net Total Base Bid which does not exceed available funds.

2. The funds available for this Project will be announced immediately after Bid Closing and before Bid Opening.

3. If the Apparent Low Bid is not within available funds, and no Net Total Base Bid is within available funds, APS may negotiate with the responsible and qualified Bidder submitting the lowest responsive

Net Total Base Bid ("Lowest Net Total Base Bid Bidder"). These negotiations may include consideration of value engineering, substitution of materials or equipment, and such other modifications of the proposed scope of the Project, Contract Period, or other Project requirements which are consistent with the Project as initially procured and with the public needs Arlington Public Schools has a duty to satisfy. APS also may attempt to obtain additional funding to increase available funds. APS and the Lowest Net Total Base Bid Bidder will discuss all such proposed means for achieving a Contract Sum within available funds for a period not to exceed forty-five (45) Days from Bid Opening.

4. If APS and the Lowest Net Total Base Bid Bidder are unable to reach agreement within such forty-five (45) Day period, APS may elect at any time either to reject all Bids and cancel this solicitation, or to terminate discussions with the Lowest Net Total Base Bid Bidder and initiate discussions with the responsible and qualified Bidder submitting a responsive Bid with the second lowest Net Total Base Bid ("Second Lowest Net Total Base Bid Bidder"). These discussions shall be on the same terms and conditions as set forth for the negotiations with the Lowest Net Total Base Bid Bidder. If APS elects to negotiate with the Second Lowest Net Total Base Bid Bidder and is unable to reach agreement within such forty-five (45) Day period, then at any time APS may determine that all Bids shall be rejected and this solicitation shall be cancelled.

Issued By:

Dyanna McMullen, CPPB, VCO
Senior Procurement Specialist
Phone: (703) 228-7649
Email: dyanna.mcmullen@apsva.us

End of Invitation

Instructions to Bidders

1. Meaning of Terms:

All terms used in the Invitation, these Instructions to Bidders, the Bid Form, or any Addenda shall have the meanings established by the Contract Documents.

2. Failure to Comply with Mandatory Requirements:

Mandatory provisions of this ITB are indicated by the inclusion of the words "shall" or "must" to identify the Bidder's obligations. Failure to comply with these requirements or with any other requirements stated as mandatory either in the Invitation, these Instructions to Bidders, the Bid Form, or any Addenda shall result in rejection of the Bid as non-responsive, except to the extent the failure or omission either is not a mandatory statutory requirement or does not affect price, quantity, quality or time, or if the requirement is designated in the Bid Documents as a Class 2 Mandatory Requirement for which supplementation after Bid Opening may be permitted.

3. Bidder Registration, Licensing and Certification:

3.1. To be eligible to Bid and to perform any Contract which may be awarded, a Bidder is required to be qualified to do business in Virginia in the name in which the Bid is being submitted, including but not limited to any required filings of applicable fictitious name authorizations.

3.2. To be eligible to Bid and to perform any Contract which may be awarded, a Bidder is required to have in effect all business licenses, Contractor licenses and trade certifications required by federal or state law or regulation, or by Arlington County, Virginia ordinance or regulation to perform the services which are the subject of this solicitation.

3.3. The Bidder shall include on the outside of the Bid Envelope its Virginia Class A Contractor's License Number and expiration date. All other registrations, licenses or certifications information and documentation shall be provided in compliance with the fillable fields provided in the Bid Form. Each such license, registration or certification shall show on its face that it is current and valid.

3.4. See "Submission of Bids" below for additional requirements regarding Bidder's registration licensing and certification.

3.5. The Bid Form provides for identification of the Bidder's State Corporation Commission Identification Number and for explanation of any reason the Bidder is not required to be authorized to transact business in the Commonwealth of Virginia.

3.6. These registration, licensing and certification requirements are mandatory provisions in the Bid Form and failure to complete these sections properly shall make the Bid non-responsive.

4. Examination of Bid Documents:

4.1. Each Bidder shall thoroughly examine the Bid Documents. The Bidder's failure or omission to examine any Bid Document shall not relieve the Bidder from any obligations with respect to its Bid or to any Contract which may result therefrom. Each Bidder shall

be responsible for the discovery and resolution by inquiry of any ambiguity, discrepancy, error, omission or conflict in the Bid Documents and Contract Documents which in the exercise of reasonable care a reasonably competent Contractor in the field of work involved reasonably should have discovered, all of which shall be included in the Bidder's Total Base Bid

5. <u>Submission of Bids</u>:

5.1. Before submitting a Bid, Bidders are encouraged to visit the site of the Work, fully inform themselves as to all existing conditions and limitations and shall include in the Bid a sum to cover the cost of all items included in the Contract. Bidders shall be fully responsible for having informed themselves as to all existing conditions for the Work. Any condition or circumstance arising after entering into the Contract which upon reasonable inspection reasonably should have been discovered prior to submitting the Bid shall not be the basis of any claim for adjustment of the Contract Sum or the Contract Time.

5.2. If the Owner is aware of any particular invention, design, process, product or device specified in the Contract Documents for use in performance of the Work which is subject to patent rights or copyrights calling for the payment of any license fee or royalty to others, it is set forth in the Contract Documents. If a Bidder discovers a requirement for any such fee or royalty, the Bidder shall make this requirement known to the Owner in order that an appropriate Addendum may be issued to all Bidders.

5.3. The Contractor shall, with its own forces, perform work having a value at least equal to the following percentage of the Bid price: **10%**

5.4. Bids must be received, and time stamped or signed in at the Procurement Office by a member of the Procurement Office prior to the Bid Closing stated in the Invitation. The Procurement Office is located at:

Arlington Public Schools
Syphax Education Center
Procurement Office, 4th Floor
2110 Washington Blvd.
Arlington, Virginia 22204

Submission of Bids electronically or by facsimile will not be accepted.

5.5. **The Bid Form, and all required additional documents referenced therein shall be submitted in a sealed, opaque envelope containing the following information on the outside of the envelope.**

Bid in Response to Arlington Public Schools Invitation to Bid No. 17FY20
Bid Closing Date and Time
Bidder's Name as appearing on the Bid Form
Commonwealth of Virginia Contractor's License Number
Contractor's License Expiration date

<u>It is preferred that the mailing label, as found at Appendix A is completed and attached to the outside of the envelope</u>. <u>IF THIS INFORMATION IS NOT</u>

CONTAINED ON THE OUTSIDE OF THE ENVELOPE THE BID WILL BE DEEMED NON-RESPONSIVE AND WILL NOT BE CONSIDERED

5.6. Bidders are responsible for ensuring that the Procurement Office receives its Bid submission prior to the Bid Closing. Delivery to, or receipt by, any office other than the Procurement Office shall not be deemed receipt by the Procurement Office until actually received in the Procurement Office. The 4th Floor reception desk also serves APS offices other than the Procurement Office. Receipt of the Bid submission by the 4th Floor reception desk therefore shall not be deemed receipt by the Procurement Office.

5.7. The time a Bid is received shall be determined by the time stamped on the Bid receipt by the time clock in the Procurement Technician's workstation. In the event this time clock is not functioning; the time shall be determined by the time displayed on the atomic clock located in the Procurement Technician's workstation. The time on the atomic clock will be written on the Bid receipt by hand by Procurement Office personnel.

5.8 The Procurement Office is located on the 4th Floor of the Syphax Education Center, 2110 Washington Blvd., Arlington, Virginia 22204 ("Syphax"). Bidders may be asked to sign in at the 4th Floor Reception Desk before being allowed to proceed to the Procurement Office. Bidders must allow sufficient time to clear the sign-in process to complete the Bid submission process prior to Bid Closing. Visitor parking is available on Levels B1 and B2 of the parking garage. The 4th Floor reception desk serves more than one APS department and receipt by the 4th Floor reception desk shall not be deemed receipt by the Procurement Office.

5.9 Sealed Bids received by the Procurement Office prior to the Bid Closing will be opened and publicly announced promptly after the Bid Closing. **Bid envelopes which fail to comply with any mandatory requirements stated in the Invitation or the Instructions to Bidders will be deemed to make the enclosed Bid nonresponsive and it will not be considered. Bids received after the Bid Closing shall not be considered.**

5.10. If Syphax is closed for any reason at the scheduled time of the Bid Closing the Bid Closing and the Bid Opening shall automatically be extended to the same time as originally stated on the next business day Syphax is open.

5.11 All Bids must be submitted on the Bid Form provided with the Bid Documents or a copy thereof. For purposes of this provision, a copy is an exact duplicate of the attached Bid Form reproduced in any manner with no modification, additions or deletions.

5.11.1 All blanks in the Bid Form must be completed or noted as not applicable. A notation of "not applicable" or "N/A" shall be used only if the information requested is not a required or mandatory element of the Bid. **It is mandatory that everything in the Bid Form is completed. A price must be entered for each line item to be considered for award. Failure to comply with this requirement shall make the Bid nonresponsive.**

5.11.2. Bid amounts shall be stated both in writing and in figures if the blanks in the Bid Form so provide and shall state the same amount. If there is a variance between the written amount and the numerical amount, the written amount shall prevail.

5.11.3. Include only one price for each line item for which a price is to be provided.

5.11.4. If there is a variance between a unit price and an extension price, the unit price will prevail.

5.11.5. All entries shall be typed or handwritten in ink or other form of permanent marker; pencil shall not be used.

5.11.6. In the event there are any erasures or other modifications to previously written or typed entries, each such erasure or other modification shall be initialed by the person signing the Bid and a brief explanation included in the margin on the same page.

5.11.7. Each signature appearing on the Bid Form shall be handwritten, shall indicate such person's authority to bind the Bidder, and shall be accompanied by the name of the signatory and the signatory's title either typed or printed legibly. A person authorized to bind the Bidder in contractual matters must sign the Bid Form.

5.11.7.1 If the Bidder is a corporation, the legal name of the corporation on file with the Virginia State Corporation Commission shall be set forth above the signature line, together with the signature of the officer or officers authorized to sign Contracts on behalf of the corporation.

5.11.7.2 If the Bidder is a limited liability company, registered limited liability partnership, or limited partnership, the legal name of the firm on file with the Virginia State Corporation Commission shall be set forth above the signature line, together with the signature of the officer, officers, member, members, partner or partners as applicable authorized to sign Contracts on behalf of the firm.

5.11.7.3 If the Bidder is a partnership, the name of the partnership as stated in the partnership agreement shall be set forth above the signature line, together with the signature of the partner or partners authorized to sign Contracts on behalf of the firm.

5.11.7.4 If the Bidder is submitting a Bid under a trade name, the Bidder shall be identified on the signature line in the true name of the entity doing business as the trade name by the person authorized to sign Contracts on behalf of the firm.

5.11.7.5 If the Bidder submitting a Bid is a joint venture, the Bidder shall be identified on the signature line in the name of the joint venture as provided in the written joint venture agreement, and the Bid shall be signed by all ventures by the person authorized to sign Contracts on behalf of each venture.

5.11.8. The Bidder shall provide, in the space provided or directed in the Bid Form, (i) its Social Security number if an individual, or (ii) its federal employer identification number if a

business entity other than an individual.

5.12 Any Bid received after the Bid Closing, whether by mail or otherwise, will not be considered and will be returned, unopened, without regard to the date of transmission.

5.13 Each Bidder must use the attached Bid Form for submitting its Bid. The Bidder shall return two (2) copies of the Bid Form, duly signed with the corporate seal impressed, if applicable, keeping all remaining pages for the Bidder's files. For purposes of this provision, a copy is an exact duplicate of the attached Bid Form reproduced in any manner with no modifications, additions or deletions. By executing and submitting the Bid Form, the Bidder acknowledges that it has read all Bid Documents, understands them, and agrees to be bound by all terms and conditions therein.

5.14 Submission of Proprietary Information. The Virginia Public Procurement Act provides limitations on the right of a Bidder to assert that information submitted as part of a Bid is proprietary information or contains trade secrets which are not subject to public disclosure. For any information the Bidder seeks to exclude from public disclosure, the burden shall be on the Bidder to comply with all applicable requirements of the Virginia Public Procurement Act. Any documentation related to such attempt to preserve the limitation of public disclosure of any information shall be submitted as a part of the Bid submission but as a separate Attachment properly marked and paginated to clearly establish the intent of such submission.

5.15 Any quantities set forth in the Bid Form or elsewhere in this solicitation are estimates only and are given for the information of Bidders and for the purpose of Bid evaluation. They do not indicate the actual quantity that will be ordered since the actual volume will depend upon requirements that develop during the Contract Period.

6. <u>Bid Security</u>:

6.1. Bids shall be accompanied by a certified check, cashier's check, cash escrow or a Bid bond in an amount not less than five percent (5%) of the amount of the Bid as a guarantee that if the Contract is awarded to the Bidder within the later of one hundred and twenty (120) days following Bid Opening or one hundred and twenty (120) days following issuance by the Owner of a Notice of Intent to Award to the Bidder, it will enter into the Contract for the Project mentioned in the Bid at the amount of the Bid and provide any required performance and payment bonds. The obligee or payee shall be Arlington Public Schools.

6.2. If the Bid security is provided in the form of a Bid bond, the surety company shall be licensed to conduct business in Virginia and be listed on the United States Treasury Department's latest Circular 570. The Bid bond shall be prepared on the Bid Bond Form included in the Bid Documents. The attorney-in-fact who executes such Bid Bond on behalf of the surety must attach a notarized copy of its power-of-attorney as evidence of its authority to bind the surety on the date of execution of the Bid Bond.

6.3. If the Bid security is in the form of cash, certified check, or cashier's check, the Bidder shall submit a Bid security agreement conforming substantially in form and effect to the Bid Bond Form. The Owner shall be authorized to deposit such check or cash and to apply the funds in accordance with the security requirements set forth herein.

6.4. The Bid Bond or Bid security agreement must clearly make reference to the solicitation number and Bid title set forth in the Invitation to Bid.

6.5. Bid security in the form of certified checks, cashier's checks or cash will be returned to all unsuccessful Bidders who submitted a certified check or cash within the earlier of rejection of all Bids or one hundred and twenty (120) days after Bid Opening or one hundred and twenty (120) days following issuance by the Owner of a Notice of Intent to Award to the Bidder.

6.6. If approved by the Arlington Public Schools' Attorney, a Bidder may furnish a personal bond, property bond, or bank or savings institution's letter of credit on certain designated funds in the face amount required for the bid bond. Approval shall be granted only upon a determination that the alternative form of security proffered affords protection to the Arlington Public Schools equivalent to a corporate surety's bond.

7. <u>Guaranty Bonds</u>:

7.1. The successful Bidder, at the time of the execution of the Contract, shall furnish a Performance Bond and a Payment Bond, each in an amount equal to one hundred percent (100%) of the Contract Price and the Contract shall not be deemed to have been fully executed until such bonds are provided. Bonds shall be on the forms herein provided and shall be issued by a surety company licensed to conduct business in the commonwealth of Virginia and listed on the United States Treasury Department's latest Circular 570, and otherwise acceptable to Arlington Public Schools. The Performance Bond and the Payment Bond shall be in effect as of the date the successful Bidder signs the Contract, and if executed prior to the date the successful Bidder signs the Contract shall include written certification from the surety that the bond is effective as of the date of the Contract. If the successful Bidder is a partnership or joint venture all partners or ventures shall execute the bond as principal in a personal and not representative capacity, in addition to execution of the bond by the Contractor as principal. Cost of said bonds shall be included in the Contract Price.

7.2. Arlington Public Schools reserves the right to request documentation from the surety company as to its financial capabilities, past experience, and other evidence of security's reliability. In the event that the Contractor's surety company becomes insolvent, bankrupt or in any way is incapable of providing the services, the Contractor shall, within ten (10) days' notice from Arlington Public Schools, furnish new payment and performance bonds to Arlington Public Schools from a surety licensed to conduct business in Virginia, listed on the United States Treasury Department's latest Circular 570, and otherwise approved by Arlington Public Schools Procurement Agent. Any cost in securing new bonding will be the responsibility of the Contractor.

8. <u>Contract Award</u>:

8.1. A Notice of Intent to Award, or a Notice of Award of Contract, will be posted on the Procurement Office notice board located on the 4th Floor at Syphax.

8.2. The Apparent Low Bid and the Apparent Low Bidder shall be the lowest responsive Bid from a responsible and qualified Bidder based upon the Total Base Bid as set forth in the Bid Form. If the Apparent Low Bid is within available funds, the Contract, if awarded, will be awarded to the Apparent Low Bidder for the entirety of the Work identified in the

Contract Documents for the Total Base Bid, subject to such Modifications which may arise subsequent to Bid Opening.

If the Apparent Low Bid is not within available funds, the procedure set forth as the Negotiation Procedures in the Event the Apparent Low Bid Exceeds Available Funds in the Invitation shall be implemented and followed.

8.3. Arlington Public Schools reserves the right to defer award or notice of intent to award of contract for a period of One Hundred Twenty (120) Days after Bid Opening.

8.4. In the case of a tie Bid, preference shall be given to goods, services and construction provided by a Bidder domiciled in Arlington County, if such a choice is available. Like preference shall be given to Bidders domiciled in Virginia when tied with Bidders not domiciled in Virginia.

8.5. Whenever the lowest responsible Bidder submitting a responsive Bid is a resident of or domiciled in any other state and such state under its laws allows a resident contractor of that state a preference of any kind, a like preference shall be allowed to the lowest responsible and qualified Bidder, submitting a responsive Bid, who is a resident of or domiciled in Virginia. If the lowest responsible and qualified Bidder submitting a responsive Bid is a resident of or domiciled in a state with an absolute preference, the Bid shall not be considered.

8.6. Notwithstanding the provisions of subsections 8.3 and 8.4, in the event that none of the foregoing provisions of this section resolve the tie, the tie shall be decided by lot.

8.7. A “responsive Bidder” shall mean a Bidder who has submitted a Bid which conforms, in all material respects, to the requirements of the Bidding Documents.

8.8. A “responsible Bidder” shall mean a Bidder who has the capability, in all respects, to perform fully the Contract requirements, and the moral and business integrity and reliability which will assure good faith performance, and who has been pre-qualified if applicable to this solicitation

9. <u>Withdrawal of Bids</u>:

9.1 All Bids submitted as of the Bid Closing shall remain in effect for a minimum of one hundred and twenty (120) Days following the Bid Opening if not permitted to be withdrawn as provided in these Instructions. If APS fails to either issue notice of intent to award, make an award, or request an extension of Bids prior to the expiration of such one hundred and twenty (120) day period, this solicitation shall be deemed cancelled. APS may request an extension of Bids prior to the expiration of such one hundred and twenty (120) Day period for a time stated in the request. No Bidder shall be required to consent to such extension and, if the Bidder declines to consent to the extension request, its Bid will be deemed withdrawn at the end of the one hundred and twenty (120th) Day after the Bid Opening and will not be considered further. For purposes of this circumstance only, the restrictions set forth below on withdrawal of a Bid are not applicable. The Bid of any Bidder who agrees to the extension request shall remain in effect for the period of time stated in the Owner’s extension request.

9.2 A Bidder may make a written request to the Procurement Director/Procurement Agent to withdraw its Bid at any time prior to the Bid Opening. The request must be time stamped as received by the Procurement Director/Procurement Agent prior to the Bid Closing.

9.3 After the Bid Opening, a Bidder may make a written request to the Procurement Director/Procurement Agent to withdraw its Bid. The written request must be time stamped as received by the Procurement Director/Procurement Agent no later than 5:00 P.M. local time on the first full business day following the Bid Opening.

9.4 Whether the request to withdraw a Bid is made before or after the Bid Closing, a Bidder may request withdrawal of its Bid from consideration only if the price bid was substantially lower than the other Bids due solely to a clerical or arithmetical mistake therein, as opposed to a judgment mistake, and was actually due to an unintentional arithmetical error or an unintentional omission of a quantity of work, labor or material made directly in the compilation of the Bid, which can be clearly shown by objective evidence drawn from inspection of the Bidder's original work papers, documents and materials used in preparation of the Bid. The Bidder shall provide the original work papers, documents, and materials within the same time as required for the notice seeking withdrawal of the Bid.

9.5 If the Procurement Director/Procurement Agent denies the written request to withdraw a Bid, the Bidder shall be notified in writing stating the reasons for the decision. Award of the Contract, if any award is made, shall be made to the Bidder at the Bid price if the Bidder is a responsible Bidder submitting the lowest responsive Bid.

9.6 No Bid may be withdrawn when the result would be the awarding of the Contract on another Bid of the same Bidder or of another Bidder in which the ownership of the withdrawing Bidder is more than five (5) percent.

9.7 If a Bid is permitted to be withdrawn, it shall not be considered in determining the lowest responsive Bid.

9.8 No Bidder who is permitted to withdraw a Bid shall, for compensation, supply any material or labor to or perform any subcontract or other work agreement for the person or firm to whom the Contract is awarded or otherwise benefit, directly or indirectly, from the performance of the project for which the withdrawn Bid was submitted.

10. <u>Rejection of Bids</u>:

Arlington Public Schools reserves the right to cancel this Invitation to Bid and to reject any and all Bids, and to waive any informality in any Bid received.

11. <u>Substitutions</u>:

11.1 The name of a certain brand, make, manufacturer, or definite specification is to denote the quality standard of article desired, but does not restrict Bidders to the specific brands, make, manufacturer, or specification named provided that the Bidder has obtained approval of the substitute as required below. It is to set forth and convey to prospective Bidders the general style, type, character and quality of article desired. Whenever in the Contract Documents a particular brand, make of material, device or equipment is shown or specified, such brand, make of material, device or equipment shall be regarded as a standard. Any other brand, make of materials, device, or equipment which, in the opinion of the Owner, is recognized as the equal of that specified, and is considered equal in quality, workmanship, design and

economy of operation, and is suitable for the purpose intended, will be accepted and may be used in the work if approved as a substitute, except as stated otherwise in Product Requirements.

11.2 Substitute materials proposed as equals to materials specified must be submitted in writing to the Owner, in care of the Procurement Agent with full substantiating data for evaluation no later than twenty (20) Days prior to Bid Closing, providing all information in accordance with the required Specification, Product Requirements, in the Contract Documents.

12. Form of Contract:

The Contract shall be written on the form included with this ITB as a Contract Document, Agreement Between Owner and Contractor".

13. Examination of Site:

Bidders are highly encouraged to visit the Site, compare the Drawings and Specifications with any work in place, and inform themselves of all conditions, including other work, if any, being performed. Failure to visit the Site in no way relieves the successful Bidder from the necessity of furnishing any materials or performing any Work that may be required to complete the Work in accordance with the Drawings and Specifications without additional cost to the Owner.

Site visits of the existing building are to be done with the coordination of Arlington Public Schools Roofing Supervisor, David Stash via email (david.stash@apsva.us). A walk-through for potential Bidders to explore the proposed building Site and existing conditions associated is scheduled for March 05, 2020, immediately following the Conference.

14. Authority to Transact Business:

Any Bidder organized as a stock or non-stock corporation, limited liability company, business trust, or limited partnership or registered as a registered limited liability partnership shall be authorized to transact business in the Commonwealth of Virginia as a domestic or foreign business entity if so required by Title 13.1 or Title 50 of the Code of Virginia, or as otherwise required by law. The proper and full legal name of the firm or entity and the identification number issued to the Bidder by the Virginia State Corporation Commission must be written in the space provided on the Bid Form. If the Bidder is a joint venture which does not have a SCC identification number, then the name of the joint venture as appearing in the written joint venture agreement shall be provided, all members of the joint venture shall be identified by full name, and each member of the joint venture shall provide its SCC identification number or establish its exemption from such requirement. Any Bidder that is not required to be authorized to transact business in the Commonwealth shall include in its Bid a statement describing why the Bidder is not required to be so authorized. APS may require a Bidder or any member or principal of a Bidder identified above to provide documentation prior to award which: 1) clearly identifies the complete name and legal form of the firm or entity (i.e. corporation, limited partnership, joint venture, etc.), and 2) establishes that the firm or entity is authorized by the State Corporation Commission to transact business in the Commonwealth of Virginia. Failure of a prospective and/or successful Bidder to provide such documentation shall be grounds for rejection of the Bid or cancellation of the award. For further information prospective Bidders should refer to the Commonwealth of Virginia State Corporation Commission website at: www.scc.virginia.gov.

15. Interest in More Than One Proposal and Collusion:

More than one Bid received in response to this solicitation from an individual, firm, partnership, corporation, affiliate, or association under the same or different names, or as a member of a joint venture, will be rejected. Reasonable grounds for believing that a Bidder is interested in more than

one (1) Bid for a solicitation both as a Bidder and as a subcontractor for another Bidder, will result in rejection of all Bids in which the Bidder is interested. However, a firm acting only as a subcontractor may be included as a subcontractor for two (2) or more Bidders submitting a Bid for the work. Any or all Bids may be rejected if reasonable grounds exist for believing that collusion exists among any Bidders. Bidders rejected under the above provisions shall be disqualified if they respond to a re-solicitation for the same work.

16. Request for Comments:

Following the award of any Contract or Contracts, or the cancellation of this solicitation, all Bidders or potential Bidders are invited to provide to APS written comments regarding the manner in which this solicitation was conducted and any suggested modifications to that process which might make future solicitations by APS more efficient, more productive, and more attractive to potential Bidders.

17. Minimum Qualifications of Bidders:

Refer to Appendix A to Bid Form.

18. Mandatory Requirement:

18.1 The following are Class 1 Mandatory Requirements which **must** accompany your Bid. Failure to provide any of the following Class 1 Mandatory Requirements with your Bid will result in the Bid being considered non-responsive and not being considered for Contract award:

18.1.1 Inclusion on the outside of the Bid envelope of the Bidder's current Virginia Class A Contractor's License number and expiration date.

18.1.2 Required Bid Security in the form of either a certified check, cashier's check, cash escrow or Bid Bond in the amount of five percent (5 %) of the Bid amount.

18.1.3. Completed Bid Form and Appendix A to Bid Form.

18.1.4. If the Bidder is a joint venture, a copy of the written joint venture agreement.

18.1.5. If the Bidder is a partnership, a copy of the written partnership agreement.

18.2 The following are Class 2 Mandatory Requirements which should accompany your Bid, but if omitted the Bidder may be given the opportunity to supplement its Bid in accordance with the restrictions set forth below:

18.2.1. List of Subcontractors for major divisions and/or features of work in compliance with the requirements of Item 17 of the Bid Form.

18.2.2. Pricing Breakdown for Total Base Bid in compliance with the requirements of Item 13 of the Bid Form.

18.2.3. An Insurance Acord demonstrating it meets the insurance coverage specified in Part 13 of the General Terms and Conditions.

18.3 If a Class 2 Mandatory Requirement is not provided with the Bid of the Apparent Low Bidder, the Apparent Low Bidder will be Notified by the Procurement Office that the omitted Class 2 Mandatory Requirements **must** be received by the Procurement Office by no later than 5:00 PM on the fifth (5th) business day following the Notice to provide the

information. Failure of the Apparent Low Bidder to provide the omitted Class 2 Mandatory Requirements within the stated timeframe will result in the Bid from the Apparent Low Bidder being considered non-responsive and no longer considered for Contract award.

The Bid from the Second Apparent Low Bidder will then be considered for Contract award. If any Class 2 Mandatory Requirement is not provided with the Bid of the Apparent Second Low Bidder, the Apparent Second Low Bidder will be Notified by the Procurement Office that the omitted Class 2 Mandatory Requirements **must** be received by the Procurement Office by no later than 5:00 PM on the fifth (5th) business day following the Notice to provide the information.

Failure of the Apparent Second Low Bidder to provide the omitted Class 2 Mandatory Requirements within the stated timeframe will result in the Bid from the Apparent Second Low Bidder being considered non-responsive and no longer considered for Contract award.

This process will continue until a Contract, within budget, is awarded, or APS determines it to be in the best interests of APS to reject all bids and cancel the solicitation.

19. Employment of Illegal Aliens:

All Bidders are informed that any Contract which may be issued as a result of this solicitation will contain a provision by which the Contractor shall be required to confirm that it does not, and shall not during the performance of the Contract, knowingly employ an unauthorized alien as defined in the federal Immigration Reform and Control Act of 1986, in compliance with Va. Code. Ann. § 2.2-4311.1.

20. Certification Regarding Criminal Convictions:

20.1 All Contracts with APS, where the Contractor or its employees, or its Subcontractors or their employees, will have direct contact with students on school property during regular school hours, or during school-sponsored activities, shall require the Contractor to certify that neither it nor any of its employees nor any of its Subcontractors' nor any of its Subcontractors' employees, who will have direct contact with students, have been:

(1) convicted of a felony or of a sexually violent offense as defined in Va. Code Ann. § 9.1-902 as mandated by Va. Code Ann. § 18.2-370.5,

(2) convicted of an offense occurring on or after July 1, 2006, where the offender was more than three years older than the victim involving:

(a) the rape of a child under age 13 pursuant to Va. Code Ann. § 18.2-61.A(iii),

(b) forcible sodomy of a child less than 13 years of age pursuant to Va. Code Ann. § 18.2-67.1.A.1,

(c) object sexual penetration of a child under 13 years of age pursuant to Va. Code Ann. § 18.2-67.2.A.1, or

(d) any similar offense under the laws of any foreign country or any political subdivision thereof, or the United States or any political subdivision thereof.

20.2 This requirement is applicable without exception for a person convicted of a felony or of a sexually violent offense as defined in Va. Code Ann. § 9.1-902, but for all other offenses set forth above this requirement does not apply unless the qualifying offense was done in the commission of, or as a part of the same course of conduct of, or as part of a common scheme or plan as a violation of:

(a) abduction or kidnapping in violation of Va. Code Ann. § 18.2-47.A,

(b) abduction with intent to extort money of for immoral purpose in violation of Va. Code Ann. § 18.2-48,

(c) burglary in violation of Va. Code Ann. § 18.2-89,

(d) entering a dwelling house with intent to commit murder, rape, robbery or arson in violation of Va. Code Ann. § 18.2-90,

(e) aggravated malicious wounding in violation of Va. Code Ann. § 18.2-51.2, or

(f) any similar offense under the laws of any foreign country or any political subdivision thereof, or the United States or any political subdivision thereof.

20.3 The Contractor certification covers its employees, its Subcontractors and the employees thereof. (Submit completed Appendix A).

20.4 The Contractor certification shall also cover its employees, its Subcontractors and employees thereof, assigned to the Work after Contract award. The Contractor, upon demand from APS, shall provide all information which allowed for the Contractor's certification

21. <u>Contractor Prohibited in Assisting Person for New Job if Engaged in Misconduct with Minor.</u>
As a condition of being awarded a Contract, or Contract Renewal, the Contractor acknowledges it is prohibited from assisting the elected and appointed officials of APS, its officers, current and former employees, agents, departments, agencies, boards, and commissions employee, and contractors, including all levels of subcontractors, in obtaining a new job if the Contractor knows or has probable cause to believe that the elected and appointed officials of APS, its officers, current and former employees, agents, departments, agencies, boards, and commissions employee, and contractors, including all levels of subcontractors, engaged in sexual misconduct regarding a minor or student in violation of law.

22. <u>Additions/Deletions</u>:
APS reserves the right to add similar items/services or delete items/services specified in any resultant Contract as requirements change during the period of the Contract. APS and the Contractor will mutually agree to prices for items/services to be added to the Contract. In the absence of agreement, APS shall set the price based on the most comparable previously established unit price. Invoices and payments shall be made based on the price established by APS, with all rights reserved to Contractor to pursue any claim disputing the price. Change orders will be issued for all additions or deletions.

23. News Releases by Contractors:

As a matter of policy, APS does not endorse the products or services of a Contractor. Contractor will not make news releases concerning any resultant Contract from this solicitation without the prior written approval of APS, which approval APS is under no obligation to grant. No news release shall be issued by Contractor regarding any Contract without the prior approval by the Director/Procurement Agent of the content and format.

24. Officials not to Benefit:

24.1 By signing the Bid, the Bidder certifies, that to the best of his or her knowledge no APS official or employee having official responsibility for the procurement transaction, or member of his or her immediate family, has received or will receive any financial benefit of more than nominal or minimal value relating to the award of this Contract. If such a benefit has been received or will be received, this fact shall be disclosed with the Bid or as soon thereafter as it appears that such a benefit will be received. If such a benefit is discovered at any time after award of the Contract, it shall be disclosed immediately to APS. Failure to disclose the information prescribed above may result in suspension or debarment, or rescission of the Contract made, or could affect payment pursuant to the terms of the Contract.

24.2 Whenever there is reason to believe that a financial benefit of the sort described in paragraph 24.1 has been or will be received in connection with a Bid or Contract, and that the Contractor has failed to disclose such benefit or has inadequately disclosed it, the Director/Procurement Agent, as a prerequisite to payment pursuant to the Contract, or at any other time, may require the Contractor to furnish, under oath, answers to any interrogatories related to such possible benefit.

24.3 In the event the Bidder has knowledge of benefits as outlined above, this information should be submitted with the Bid. If the above does not apply at time of award of Contract and becomes known after inception of a Contract, the Bidder shall address the disclosure of such facts to the Procurement Director/Procurement Agent, 2110 Washington Blvd., Arlington VA 22204. Relevant Invitation to Bid Number (see page 1) should be referenced in the disclosure.

25. Expenses Incurred in Preparing Bid:

APS shall have no liability for any expense incurred by any Bidder in the preparation and presentation of a Bid. All expenses related to a Bid are the sole responsibility of the Bidder.

End of Instructions to Bidders

Bid Form

Invitation to Bid Title:	**Jefferson Middle Gym Roof Replacement Project**
Invitation to Bid #:	**17FY20**
Invitation to Bid Issue Date:	**February 27, 2020**
Bid Closing Date/Time:	**March 23, 2020 at 10:00 A.M. (Local Prevailing Time)**
Bid Opening Date/Time:	**Promptly Following Bid Closing**
Name of Bidder:	_____

Submit Bid: **By Mail, Hand Delivery or Express Carrier to:**

Arlington Public Schools
Syphax Education Center
Procurement Office, 4th Floor
2110 Washington Boulevard,
Arlington, VA 22204

1. The undersigned Bidder declares that it has informed itself fully of all conditions pertaining to the Work and to the location where the Work is to be performed; that it has examined the Bid Documents and Contract Documents, including the Agreement between Owner and Contractor, Conditions of the Contract (General and other conditions), Instructions to Bidders, the Drawings, the Specifications, all Addenda, and all conditions relative to the Work to be performed.

2. The Bidder proposes and agrees, if this Bid is accepted within the number of days provided for in the Instruction to Bidders, to enter into a Contract with the Owner in the form of Contract specified, for the Contract Sum, and within the Contract Period indicated in the Bid Documents to furnish all necessary material, equipment, machinery, apparatus, transportation and labor as required to complete the project indicated on this Bid Form.

3. The Bidder certifies that it has not combined, conspired or agreed to intentionally rig, alter or otherwise manipulate, or to cause to be rigged, altered or otherwise manipulated this Bid for the purpose of allocating purchases or sales to or among persons, raising or otherwise fixing the prices of the goods or services, or excluding other persons from dealing with Arlington Public Schools.

4. Arlington Public Schools requires that a minimum of thirty (30) days after receipt of an approved Application for Payment (invoice) be allowed for payment.

5. The Bidder certifies that it will comply with all provisions of the Virginia Public Procurement Act and with the regulations of Arlington Public Schools.

6. By submitting a Bid, the Bidder represents that the Bidder understands the Insurance Requirements of the Contract Documents and will comply in full if awarded the contract.

7. In submitting this Bid, Bidder represents, as more fully set forth elsewhere in the Bid and Contract Documents:

   a. Owner has recommended the Bidder examine the site and locality where the Work is to be, the legal requirements (federal, state, and local laws, ordinances, rules and regulations) and the conditions affecting cost, progress of performance of the Work and has made such independent investigations as Bidder deems necessary.

   b. Bidder acknowledges that Owner and Owner's Representative (Architect) do not assume responsibility for the accuracy of dimensions or completeness of information and data shown or indicated in the Bid Documents with respect to existing facilities.

   c. Bidder acknowledges that it is obligated to provide to Owner written notice of all conflicts, errors, ambiguities, or discrepancies that Bidder has discovered or in the exercise of due diligence and reasonable care as a reasonably competent contractor for the Work to which this Bid is applicable should have discovered in the Bid and Contract Documents and the written resolution thereof by the Owner is acceptable to Bidder, and the Contract Documents are generally sufficient to indicate and convey understanding of all terms and conditions for performing and furnishing the Work for which this Bid is submitted.

   d. By submitting a Bid in response to this Invitation to Bid Bidder represents that in the preparation and submission of this Bid, Bidder did not, either directly or indirectly, enter into any combination or arrangement with any person, firm, or corporation or enter into any agreement, participate in any, collusion, or otherwise take any action in the restraint of free, competitive bidding in violation of the Sherman Act (15 U.S.C. Section 1) or Sections 59.1-9.1 through 59.1-9.17 or Sections 59.1-68.6 through 59.1-68.8 of the Code of Virginia.

   e. Bidder hereby certifies that, if awarded the Contract for construction of the Project, it will take all possible actions to minimize costs to Owner that are related to any disruptions in any part of the Work resulting from unforeseeable conditions which may be encountered and Work changes or additions which may be made.

   f. Bidder understands that the award of the Contract, if any, will be made on the Total Base Bid unless specifically stated otherwise in the Instructions to Bidders or in this pre-printed Bid Form. Bidder understands that upon award of Contract, all items specified in the Bid Documents shall be furnished unless an "Or-Equal" or "Substitute Item" is accepted by Owner in accordance with the Bid Documents and Contract Documents.

   g. The Bidder agrees to bear full cost of maintaining the Work until final acceptance of the Work is approved as provided by the Contract.

   h. This Bid will remain subject to acceptance for one hundred and twenty (120) days after the day of the Bid Opening.

   i. Owner may cancel this Invitation to Bid, and may reject any and all Bids received.

8. Bidder agrees to the required times for Substantial Completion, Final Completion, and to resulting Liquidated Damages as follows:

a. The Work will commence in accordance with the Contract Documents and will have a Substantial Completion Date, a Final Completion Date, and liquidated damages, if any, as provided in the Contract Documents. These completion dates are subject to adjustments of the Contract Period as provided in the Contract Documents.

9. A. As a Class 1 Mandatory Requirement, the following documents are attached to and made part of this Bid:

1. Required Bid Security in the form of either a certified check, cashier's check, cash escrow or Bid Bond in the amount of five percent (5 %) of the Bid amount.

2. Contractor's License information in compliance with Paragraph 18.1.1 of the Instructions to Bidders.

3. Completed Appendix A to Bid Form.

4. If the Bidder is a joint venture, a copy of the written joint venture agreement.

5. If the Bidder is a partnership, a copy of the written partnership agreement.

B. The following documents are Class 2 Mandatory Requirements and are: (Please complete the following by checking the appropriate line that applies to providing the requested information)

a. _____ attached to and made a part of this Bid

b. _____will be supplemented in compliance with the provisions of Paragraph 18.2 of the Instructions to Bidders:

1. List of Subcontractors for major divisions and/or features of work in compliance with the requirements of Item 17 of this Bid Form and Paragraph 18.2.1 of the Instructions to Bidders.

2. Pricing Breakdown for Total Bid in compliance with the requirements of Item 13 of the Bid Form

3. Insurance Acord in compliance with Paragraph 18.2.3 of the Instructions to Bidders.

10. By submitting this Bid, Bidder certifies that the firm submitting this Bid and registered under that name has the appropriate license and/or certification, as determined by the Commonwealth of Virginia, Department of Professional and Occupational Regulation, Virginia Board for Contractors to perform the scope of work included in this Bid. Include license number below. **Note: See Instructions to Bidders for the requirement to include the contractor's license or certificate number, and date of expiration, on the face of the Bid envelope in addition to completing the information below.**

a. ____ Registered as a Contractor under Title 54.1, Chapter 11 of the Code of Virginia:

Licensed Class _____ Virginia Contractor No. _____ Valid until _____

_____ (Date).

Classifications _____

11. Bidder has examined copies of the following Addenda, and receipt of all is hereby acknowledged:

Addendum No. ____	Dated: _____	Addendum No. ____	Dated: _____
Addendum No. ____	Dated: _____	Addendum No. ____	Dated: _____
Addendum No. ____	Dated: _____	Addendum No. ____	Dated: _____
Addendum No. ____	Dated: _____	Addendum No. ____	Dated: _____

12. **Any Notation on the Exterior of the Envelope Purporting to Alter, Amend, Modify or Revise the Bid will be Disregarded.**

13. **Bid Schedule**

My Bid to provide all labor, materials and equipment necessary to complete the Work described in the Invitation to Bid is provided in the Bid Form

Bid Item 1. Total Base Bid:

_____ In Writing $_____In Figures

The funds available for this Project will be announced immediately after Bid Closing and prior to Bid Opening.

If Arlington Public Schools is unable to achieve a Contract Sum within available funds for the Total Base Bid, Arlington Public Schools may negotiate to achieve a Contract Sum within available funds in the manner provided in the Invitation.

Bid Item 2. Unit Prices:

Unit prices include all necessary material, plus cost for delivery, installation, insurance, applicable taxes, overhead, and profit.

Prior to commencing removal or replacement of materials set forth in the schedule of Unit Prices, the Contractor shall notify the Owner in sufficient time to permit proper inspection and measurements to be taken. Only quantities that have been approved in writing by the Owner will be considered in determination of adjustments to the Contract Amount.

Unit Prices and quantities are provided to adjust the specific work items because quantity of work is unknown. Work of similar scope as those unit price items contained in and defined by the Construction Documents shall not be considered as Unit Price Work.

Owner reserves the right to reject Contractor's measurement of work-in-place that involves use of established unit prices and to have this work measured, at Owner's expense, by an independent inspector acceptable to Contractor.

List of Unit Prices: A list of unit prices and quantities to be provided in the Base Bid is included. The quantities shown in the list of unit prices shall be ***EXCLUSIVE*** of the quantities shown on the drawings

Specification sections referenced in the schedule contain requirements for materials described under each unit price.

UNIT PRICE SCHEDULE: Submit a Bid on the item identified on the Unit Price Schedule below. A Bid is required for both an addition and deletion to the Contract. Unit abbreviations are: square foot (SF).

UNIT PRICE SCHEDULE			
Item	**Unit**	**Addition**	**Deletion**
For scraping and priming of more/less surface rusted areas of steel deck and framing than the two thousand five hundred (2,500) square feet carried in the Base Bid as outlined in Division 05 Section "Steel Decking."	SF	$	$
For removal and replacement of more/less steel deck than the one thousand five hundred (1,500) square feet carried in the Base Bid as outlined in Division 05 Section "Steel Decking."	SF	$	$
For the removal and replacement of more/less fiberglass insulation in the deck flutes than the two thousand (2,000) square feet carried in the Base Bid as outlined in Division 07 "Roof and Deck Insulation."	SF	$	$

Bid Item 3. Pricing Breakdown for Total Base Bid Above:

Provide Lump Sum prices per Division as listed in the Scope of Work and Bid Documents. (This information is a Class 2 Mandatory Requirement. Bidder may elect not to include the information in its Bid as submitted for Bid Closing. <u>If not included in the Bid submitted for Bid Closing, this information and this form must be received by Owner no later than 4:00 P.M. the next business day following the Bid Opening or the Bid will be deemed nonresponsive and not considered further.</u>):

A. Division 1: General Requirements_____Dollars ($_____)

B. Division 2: Existing Conditions_____Dollars ($_____)

C. Division 5: Metals_____Dollars ($_____)

D. Division 6: Wood, Plastic, and Composites_____Dollars ($_____)

E. Division 7. Thermal & Moisture Protection_____Dollars ($_____)

F. Division 9. Finishes_____Dollars ($_____)

G. Division 22 Plumbing_____Dollars ($_____)

H. Division 23 HVAC_____Dollars ($_____)

Bid Item 4. Bid Alternates:

Submit a Bid on each of the Bid Alternates as identified in the Bid Documents and listed below. Do not enter "No Bid" for any Bid Alternate. If the Bid Alternate does not affect your Total Base Bid, enter "$0.00 (zero dollars)." FAILURE TO COMPLETE ALL BID ALTERNATES AS INSTRUCTED SHALL MAKE THE BID NONRESPONSIVE AND IT WILL NOT BE CONSIDERED FURTHER.

The Bid Alternate is listed as a potential deduct from the Total Base Bid. If the lowest responsive Bid from a responsible and qualified Bidder based upon the Total Base Bid is within available funds, the Contract, if awarded, will be awarded to the Apparent Low Bidder for the entirety of the Work identified in the Contract Documents for the Total Base Bid, subject to such Modifications which may arise subsequent to Bid Opening. If no responsive Bid is received from a responsible and qualified Bidder in which the Total Base Bid is within available funds, application of Bid Alternates and, if necessary, negotiations, all as set forth in the Invitation, may be implemented.

The funds available for this Project will be announced immediately after Bid Closing and prior to Bid Opening.

Refer to Section 01 23 00 for additional details and descriptions of all Bid Alternates.

SCHEDULE OF ALTERNATES
Remove existing base flashings and gravel-surfacing and provide overlay roof assembly as shown on the Drawings. Reference Section 024119 "Selective Structure Demolition" for removal of asbestos-containing materials. Contractor shall provide an Infrared Scan and/or test cuts as required by the manufacturer to determine condition of the existing roof assembly. Contractor shall carry 5 percent replacement of the existing roof assembly in Base Bid. All wood blocking, stud walls, plywood, wall panels, and sheet metal assemblies shall be provided as shown on the Drawings.

If Arlington Public Schools is unable to achieve a Contract Sum within available funds for the Total Base Bid, Arlington Public Schools may negotiate to achieve a Contract Sum within available funds in the manner provided in the Invitation to Bid.

Preference Listing.

Preference 1: Lowest Amount of the Total Base Bid.

Preference 2: Lowest Aggregate Amount of the Total Base Bid less Bid Alternate No. 1. ("Net Total Base Bid")

BID ALTERNATE NO. 1 Provide Overlay Roof Assembly in Lieu of New Roof Assembly Deduct

_____ Dollars $_____.00

14. **Contact for Administration:**

Name:

Address: (Office) _____

Telephone Number: (Office) _____

Fax Number: _____

Full Legal Name of Bidder _____

Remittance Address (If different):

Address:_____

Phone: (_____)_____

Email Address:_____

Fax: (_____)_____

Date:_____

Tax ID Number (EIN/SSN):_____

15. **State Corporation Commission (SCC) Identification Number:**

A Bidder is required to be authorized to transact business in the Commonwealth of Virginia as a domestic or foreign business entity if so required by Title 13.1 or Title 50 or as otherwise by law. The Bidder confirms that at the time of Bid Closing, the Bidder has met the requirements of the Virginia Public Procurement Act Section 2.2-4311.2. The Bidder shall include in its Bid the identification number issued to it by the Virginia State Corporation Commission ("SCC"). If the Bidder is a joint venture which does not have a SCC identification number, then the name of the joint venture shall be provided, all members of the joint venture shall be identified by full name, and each member of the joint venture shall provide its SCC identification number or establish its exemption from such requirement. For more information on how the SCC can expedite a request for an identification number, please contact the SCC at ***(www.scc.virginia.gov) or the SCC Clerk's office at 1-804-371-9733.***

Please complete the following by checking the appropriate line that applies and providing the requested information

1. ____ Bidder is a Virginia business entity organized and authorized to transact business in Virginia by the SCC. The Bidder's identification number issued by the SCC is . ***(The SCC number is NOT your federal tax Identification number nor your eVA registration number)***.

2. ____ Bidder is an out-of-state (foreign) business entity that is authorized to transact business in Virginia by the SCC and such Bidder's identification number issued to it by the SCC is .

3. ____ Bidder is a Virginia joint venture organized and authorized to transact business in Virginia by the SCC.

4. ____ Bidder is a joint venture which does not have an identification number issued to it by the SCC but each member of the joint venture is authorized to transact business in Virginia and the SCC identification numbers issued to each member of the joint venture are: [list member name and SCC identification number for each member, or provide the asserted exemption information in subSection 5 below]
_____

5. ____Bidder does not have an identification issued to it by the SCC and such Bidder is not required to be authorized to transact business in Virginia by the SCC for the following reason(s):

If you check Option 5 above, you must attach additional sheets to explain in further detail why such Bidder is not required to be authorized to transact business in Virginia. Bids that fail to submit supporting details regarding option 3 above may be considered non-responsive by APS.

***Note: If Bidder is required to have an SCC#, the SCC# shall be active at the date/time that the Bid is opened. Failure of Bidder to have an active SCC# at the date/time the Bid is opened will result in a determination that Bid is non-responsive and the Bid shall be rejected and will not be considered for Contract award.**

16. **Virginia Contractor's License:**

A Bidder is required at the time of Bid Closing and, if awarded a Contract, at the time of contracting, to hold a Virginia Class A Contractor's License with all specialty classifications required for all portions of the Work the Bidder intends to perform with its own forces if awarded the Contract. The Bidder confirms that at the time of Bid Closing, the Bidder holds a Virginia Class A Contractor's License with all specialty classifications required for all portions of the Work the Bidder intends to perform with its own forces. The Bidder shall include on the outside of the envelope in which its Bid is submitted the Class A Contractor's License number and date of license expiration. If the Bidder is a joint venture which does not have a Virginia Class A Contractor's License, then the name of the joint venture shall be provided, all members of the joint venture shall be identified by full name, and each member of the joint venture shall provide Contractor's License information in compliance with these requirements.

17. **List of Subcontractors:**

Listed below are certain divisions or features of the Work contained in the Contract Documents ("Identified Divisions or Features"). For any Identified Division or Feature which the Bidder intends to perform itself, it is a Class 1 Mandatory Requirement that the Bidder hold the classifications or specialty designations required to permit it to perform that Identified Division or Feature.

For any Identified Division or Feature which the Bidder intends to have performed by a Subcontractor ("Identified Division or Feature Subcontractor"), the Bidder shall state below the name of each proposed Identified Division or Feature Subcontractor, and shall state the Virginia Class A Contractor's License number and expiration date for that Identified Division or Feature Subcontractor. The Contractor's License for each proposed Identified Division or Feature Subcontractor shall include the classification or specialty which permits the Identified Division or Feature Subcontractor to perform such Work. As a Class 2 Mandatory Requirement, the Bidder may elect to submit this Identified Division or Feature Subcontractor Information as provided in Paragraph 18.3 of the Instructions to Bidders.

For any Subcontractors other than Identified Division or Feature Subcontractors, all such Subcontractors shall have a Virginia Contractor's License in compliance with the Class A, Class B or Class C requirements established by applicable statutes and Virginia Board for Contractors Regulations. For all proposed Subcontractors other than Identified Division or Feature Subcontractors, the successful Bidder shall have a maximum of fourteen (14) days after Notice to Proceed to submit to APS for vetting and approval the **final** list of such Subcontractors, which final list shall include the previously Identified Division or Feature Subcontractors. If the Bidder at any time after Bid Closing seeks to change an Identified Division or Feature Subcontractor identified below, the Bidder shall comply with the requirements of General Conditions Part 6.

The Bidder certifies that all Subcontractors listed are eligible in all respects to perform the Work. Bidder's failure to submit the List of Subcontractors in compliance with Item 9.B of this Bid Form shall result in Bidder's Bid being deemed as non-responsive.

Subcontractor's Work	Subcontractor's Name and Class A Contractor's License Number and Expiration Date
Subcontractor's Work	Subcontractor's Name
Structural Steel:	_____
Mechanical:	_____
Electrical:	_____

18. **Debarment Status:**

If you answer yes to any of the following, on a separate attachment, state the person or entity against whom the debarment was entered, give the location and date of the debarment, describe the project involved, and explain the circumstances relating to the debarment, including the names, addresses and phone numbers of persons who might be contacted for additional information

1. Is your organization or any officer, director, project manager, procurement manager, chief financial officer, partner or owner currently debarred from doing federal, state or local government work for any reason?
   Yes ___ No ___

2. Has your organization or any current officer, director, project manager, procurement manager, chief financial officer, partner or owner ever been debarred from doing federal, state or local government work for any reason?
   Yes ___ No ___

My signature certifies that the Bidder has no business or personal relationships with any other companies or persons that could be considered as a conflict of interest or potential conflict of interest to Arlington Public Schools, and that there are no principals, officers, agents, employees, or representatives of Bidder that have any business or personal relationships with any other companies or person that could be considered as a conflict of interest or a potential conflict of interest to Arlington Public Schools, pertaining to any and all work or services to be performed as a result of this Bid and any resulting Contract with Arlington Public Schools.

Person signing must be authorized to bind the Bidder in contractual matters. If the Bidder is a joint venture the Bid must be signed by an authorized representative of each member of the joint venture. Add additional copies of this signature page if necessary

By:_____

Name:_____

Title:_____

Date:_____

End of Bid Form

Appendix A to Bid Form

Bidder's Qualifications

I. **Bidder Experience**: The Bidder shall have experience and expertise in roof replacement. This experience shall include the removal and disposal of existing roof systems and components, including membrane, insulation, vapor barriers, flexible and metal flashings, and associated materials and components down to structural deck. The Bidder must have a minimum of **five (5) years' experience as a Virginia Class A licensed contractor as of Bid Closing. The Bidder, and (CBC, ELE, PLB) or its Subcontractors, must have the classifications and/or specialty designations required to perform the work (CBC, ELE, PLB).** If the Bidder or its principals operated under another name or entity within five (5) years, the Bidder shall provide the same level of information on the other name or entity.

1. Please state whether the Bidder has a minimum of five (5) years' experience as a Virginia Class A licensed contractor and holds a current Class A Contractor's License, with a Commercial Building License Classification (CBC, ELE, PLB):

   Yes_____ No_____

2. If the Bidder's answer to the preceding question was "No," comply with the requirements of Paragraph 18 of the Instruction to Bidders and Item 17 of the Bid Form regarding proposed Subcontractors

3. Please provide the date on which the Bidder was established as a full time Virginia Class A Licensed Contractor:

   (Month/Day/Year): _____

4. Name of Previous Business or Entity (If Applicable):_____.

5. If utilizing a Subcontractor to do Electrical work, the Subcontractor must have a Class A License with an (ELE) Electrical, specialty designation.

   (Month/Day/Year and Class A Number of Subcontractor):_____

6. If utilizing a Subcontractor to do Plumbing work, the Subcontractor must have a Class A License with a (PLB) Plumbing, specialty designation.

   (Month/Day/Year and Class A Number of Subcontractor): _____

7. Please indicate your acceptance, roof construction and materials shall comply with these specifications and the latest editions of the following:

    1. Sheet Metal and Air Conditioning Contractors National Association (SMACNA)
    2. The National Roofing Contractors Association (NRCA) "Roofing and Waterproofing Manual"
    3. The Asphalt Roofing Manufacturers Association (ARMA).
    4. Factory Mutual Global (FMG) publications "Loss Prevention Data for Roofing Contractors" and "Building Materials Approval Guide"
    5. Underwriters Laboratories, Inc. "Roofing Materials and Systems Directory"
    6. All work shall be performed in accordance with the International Building Code (IBC) in effect at the time of Bid and applicable Federal, State, and local code amendments, requirements, and publications.

    Yes_____ No_____

8. Bidder shall submit roof system warranty from manufacturers with at least twenty (20) years of successful production and product installation of roof systems:

    a. TPO Membrane Manufacturers: Subject to compliance with requirements, provide products by one of the following or approved equal:
        1) Carlisle SynTec Incorporated.
        2) Firestone Building Products Company.
        3) GAF Materials Corporation.
        4) Johns Manville.
        5) Versico Incorporated

    b. Thickness: 80 mils, nominal
    Yes_____ No_____

    c. Modified Bitumen Roofing Manufacturers or approved equal:
        1) Garland, Inc.
        2) Tremco, Inc.
        3) Siplast
        4) Johns Manville
    Yes_____ No_____

9. Or approved equal (manufacture)_____
(See Section 11.2, Instructions to Bidders)

II. <u>Demonstrated Performance on Relevant Projects</u>: The Bidder must have demonstrated satisfactory performance, as determined by Arlington Public Schools, on at least **three (3) projects that involve** removal and disposal of existing roof systems and components, including membrane, insulation, vapor barriers, flexible and metal flashings, and associated materials and components down to structural deck. Completed in tight schedules where time is of the essence (durations of less than four months). Additionally, the projects submitted shall have been of a **minimum value of $750,000 (seven hundred-fifty thousand dollars) and been successfully and substantially completed** within the **past five (5) years prior to Bid Closing**.

1. Please state whether the Bidder successfully and substantially completed three (3) projects within the past five years prior to Bid Closing? **Yes**_____ **No**_____

2. For each project listed, please provide the following information:

<u>Project 1</u>:

i. Name of Project: _____

ii. Description: _____

_____

_____

<u>Project Duration:</u> _____

<u>(Bidder may attach additional project description to this Form).</u>

iii. Owner Name: _____

Address: _____

Contact Person: _____

Telephone Number: (_____) _____

Name of Project Superintendent: _____

iv. Design Architect/Engineer Name: _____

Address: _____

Contact Person: _____

Telephone Number (_____) _____

v. Contract Dates - Attach additional information if project was not on schedule.

Started:_____

Original Contractual Completion: a) Substantial Completion _____

b) Final Completion _____

Actual Completion: a) Substantial Completion_____

b) Final Completion _____

vi. Original Contract Price $_____

Final Contract Price $_____

Project 2:

i. Name of Project: _____

ii. Description: _____

_____

_____

Project Duration: _____

(Bidder may attach project description to this Form).

iii. Owner Name: _____

Address: _____

Contact Person: _____

Telephone Number: (_____)_____

Name of Project Superintendent: _____

iv. Design Architect/Engineer Name: _____

Address: _____

Contact Person: _____

Telephone Number: (_____)_____

v. Contract Dates - Attach additional information if project was not on schedule.

Started:_____

Original Contractual Completion: a) Substantial Completion _____

b) Final Completion _____

Actual Completion: a) Substantial Completion_____

b) Final Completion _____

vi. Original Contract Price $_____

Final Contract Price $_____

Project 3:

i. Name of Project: _____

ii. Description: _____

_____

_____

Project Duration: _____

(Bidder may attach additional project description to this Form).

iii. Owner Name: _____

Address: _____

Contact Person: _____

Telephone Number: (_____) _____

Name of Project Superintendent: _____

iv. Design Architect/Engineer Name: _____

Address: _____

Contact Person: _____

Telephone Number: (_____) _____

v. Contract Dates - Attach additional information if project was not on schedule.

Started: _____

Original Contractual Completion: a) Substantial Completion _____

b) Final Completion _____

Actual Completion: a) Substantial Completion _____

b) Final Completion _____

vi. Original Contract Price $ _____

Final Contract Price $ _____

III. **<u>Key Personnel</u>:** The Project Superintendent shall have **at least five (5) years** of experience as a Superintendent. Also, the Project Superintendent must have managed or supervised at least **three (3) projects** that include removal and disposal of existing roof systems and components, including membrane, insulation, vapor barriers, flexible and metal flashings, and associated materials and components down to structural deck completed in tight schedules where time is of the essence (duration of less than four months). Additionally, the Projects submitted shall have been of a minimum value of **seven hundred and fifty thousand dollars ($750,000) and have been successfully and substantially completed** within the **past five (5) years prior to Bid Closing**.

1. Please state whether the Project Superintendent has at least five (5) years roof replacement experience completed within the past five years prior to Bid Closing?

   Yes_____ No_____

   Please attach a copy of the Project Superintendent's resume.

2. Please state whether the Bidder's Project Superintendent has successfully and substantially completed three (3) projects of similar size and project specific requirements prior to Bid Closing; <u>and</u> a minimum final contract price of seven hundred and fifty thousand dollars ($750,000)
   Yes_____ No_____

3. For each project listed, please provide the following information: (**<u>Note</u>**: If Project Superintendent has managed the projects listed in response to Section II, there is no need to provide this information below).

- **Project 1**:

i. Name of Project: _____

ii. Description: _____

_____

_____

Project Duration: _____

(Bidder may attach additional project description to this Form).

iii. Owner Name: _____

Address: _____

Contact Person: _____

Telephone Number: (_____) _____

Name of Project Superintendent: _____

iv. Design Architect/Engineer Name: _____

Address: _____

Contact Person: _____

Telephone Number (_____) _____

v. Contract Dates - Attach additional information if project was not on schedule.

Started:_____

Original Contractual Completion: a) Substantial Completion _____

b) Final Completion _____

Actual Completion: a) Substantial Completion_____

b) Final Completion _____

vi. Original Contract Price $_____

Final Contract Price $_____

- **Project 2**:

i. Name of Project: _____

ii. Description: _____

_____

_____

Project Duration: _____

(Bidder may attach project description to this Form).

iii. Owner Name: _____

Address: _____

Contact Person: _____

Telephone Number: (_____) _____

Name of Project Superintendent: _____

iv. Design Architect/Engineer Name: _____

Address: _____

Contact Person: _____

Telephone Number: (_____) _____

v. Contract Dates - Attach additional information if project was not on schedule.

Started:_____

Original Contractual Completion: a) Substantial Completion _____

b) Final Completion _____

Actual Completion: a) Substantial Completion_____

b) Final Completion _____

vi. Original Contract Price $_____

Final Contract Price $_____

- **Project 3**:

i. Name of Project: _____

ii. Description: _____

_____

_____

Project Duration: _____

(Bidder may attach additional project description to this Form).

iii. Owner Name: _____

Address: _____

Contact Person: _____

Telephone Number: (_____) _____

Name of Project Superintendent: _____

iv. Design Architect/Engineer Name: _____

Address: _____

Contact Person: _____

Telephone Number: (_____) _____

v. Contract Dates - Attach additional information if project was not on schedule.

Started: _____

Original Contractual Completion: a) Substantial Completion _____

b) Final Completion _____

Actual Completion: a) Substantial Completion _____

b) Final Completion _____

vi. Original Contract Price $_____

Final Contract Price $_____

End of Appendix A to Bid Form

Agreement Between Owner and Contractor

THIS AGREEMENT, made and entered into this ___ day of _____, 2020; between Arlington County School Board, operating as Arlington Public Schools, Virginia (the "Owner") and _____ (the "Contractor"), whose address is _____
_____
_____
_____

In consideration of the mutual stipulations, agreements and covenants contained herein, the parties hereby agree as follows:

1. The Project

Contractor shall provide all labor, services, equipment and materials necessary and required to complete the Work in accordance with the Contract Documents for the following Project:

Jefferson Middle Gym Roof Replacement, Located at 125 S. Old Glebe Road, Arlington, VA, 22204.

2. The Contract Documents

The following, except for such portions thereof as may be specifically excluded, constitute the Contract Documents except for titles, subtitles, headings, running headlines, and tables of contents (all of which are used merely for convenience):

1. Agreement Between Owner and Contractor
2. General Conditions
3. Drawings and Specifications
4. Bid Documents and Addenda
5. Notice to Proceed

Modifications issued after execution of this Agreement have the precedence as addressed below.

In the event of a conflict between any Contract Documents, the order of precedence shall be in the order the Contract Documents are listed above, with the exception that any Addendum or Modification shall have precedence over the preceding version of the Contract Document modified thereby. In the event of a conflict within a Contract Document at the same level of precedence, that provision requiring the higher quality of performance or quantity shall prevail. In the event of a conflict which is not resolved by the foregoing, the Owner shall determine the provision having precedence in a manner consistent with the intent of the Contract Documents as a whole.

All provisions required by Law to be included in this Contract or otherwise applicable to this Contract shall be deemed to be a part of this Contract, whether actually set forth herein or not.

The Contract Documents are complementary and what is called for by one is as binding as if called for by all. If the Contractor finds a conflict, error, ambiguity or discrepancy in the Contract Documents, it shall immediately, in writing, call such conflict, error, ambiguity or discrepancy to the attention of Owner and the Owner's Representative before proceeding with the Work affected thereby. The Owner and/or the Owner's Representative shall promptly resolve the matter in writing. Work done by the Contractor after it discovered, or reasonably should have discovered, such conflicts, errors, ambiguities or discrepancies, prior to written resolution thereof by the Owner, shall be done at the Contractor's expense and the Contractor shall bear the risk of any delay arising therefrom or related thereto. Any Work that may reasonably be inferred from the Specifications or Drawings as being required to produce the intended result shall be supplied whether or not it is specifically called for. Work, materials or equipment described in words which so applied have a well-known technical or trade meaning shall be deemed to refer to such recognized standards.

The Contractor shall be held to a standard of strict compliance with the requirements of the Contract Documents in the performance of the Work, for giving Notice of any type to the Owner or to the Owner's Representative, and for making any submittal required for any purpose. The Contractor acknowledges and agrees that all time requirements set forth in the Contract Documents for any purpose are of the essence.

3. **Definitions**

All words and terms shall have the meanings assigned to them in Part 1 of the General Conditions, unless a different meaning is clear from the context.

4. **Contract Period**

The Work will be completed in accordance with the Contract Documents and will have the following start, Substantial Completion, and Final Completion dates:

May 18, 2020 – Anticipated Notice to Proceed (NTP) for Project Administrative Contract Deliverables

May 26, 2020 – Anticipated NTP for Project Site Mobilization and Construction

December 01, 2020 – Substantial Completion

December 15, 2020 – Final Completion

Note: These dates are subject to adjustments as provided in the Contract Documents.

5. **Contract Sum**

Owner shall pay Contractor for completion of the Work in accordance with the Contract Documents. The Contract Sum is:

In Writing: _____Dollars

In Figures: $_____.00

6. **Liquidated Damages**

The Owner and the Contractor recognize that time is of the essence in this Agreement and that Owner will suffer damages if Substantial Completion, and thereafter Final Completion, of the Work, or of any individual Phase of the Work for which a Substantial Completion, and if applicable, Final Completion, date with associated Liquidated Damages is established by the Contract Documents, is not complete within the time specified in Paragraph 4 above, plus any extensions thereof allowed in accordance with Part 10 of the General Conditions. The Owner and the Contractor agree that the actual damages to be incurred by the Owner in the event of late completion are not readily ascertainable or capable of estimation at the time of contracting. It is understood and agreed that the Liquidated Damages amount shall not be affected by the Owner's use or occupancy of, or by the achievement of Substantial Completion or Final Completion of, less than the entirety of the Work to which the Liquidated Damages amount may be applicable. The Contractor hereby waives without condition or limitation any objection that the amount of Liquidated Damages set forth below is void as a penalty or is not reasonably related to actual damages. Without limitation of the foregoing, Contractor also agrees that any deduction of Liquidated Damages from amounts otherwise payable to Contractor shall not constitute improper or wrongful nonpayment of Contractor and Contractor without limitation or condition conclusively waives any claim or cause of action premised in whole or in part on any such deduction of Liquidated Damages. In the event more than one ground for assessment of Liquidated Damages as set forth herein exists concurrently, such grounds shall be deemed to be, and hereby are agreed to be, independent and all applicable Liquidated Damages shall be assessed and deducted cumulatively. In the event that, subsequent to any deduction of Liquidated Damages as authorized herein, a time extension is granted or any determination is made which affects in whole or in part the amount of Liquidated Damages deducted, Contractor acknowledges and agrees that its sole remedy shall be payment by the Owner of the principal amount of Liquidated Damages so determined to be payable to the Contractor plus interest as provided in the Contract Documents. Accordingly, the Owner and the Contractor agree that as Liquidated Damages for delay in achieving timely completion as required by the Contract (but not as a penalty), the Contractor shall:

a. Pay Owner **One Thousand Dollars ($1,000.00)** for each day that expires after the time specified in Paragraph 4 for the **Substantial Completion Date**, plus any approved time extensions, until Substantial Completion is achieved; and Pay Owner **Two Hundred-Fifty Dollars ($250.00)** for each day that expires after the time specified in Paragraph 4 for the **Final Completion Date**, plus any approved time extensions, until Final Completion is achieved

b. Contractor hereby consents to the Owner withholding from amounts otherwise payable to the Contractor all Substantial Completion Liquidated Damages and Final Completion Liquidated Damages which have been assessed through the date of payment. If the amount of Substantial Completion Liquidated Damages and Final Completion Liquidated Damages assessed exceeds the amount otherwise payable to Contractor, Contractor shall make payment thereof to Owner within fourteen (14) days following issuance by Owner of Notice of payment due for Substantial Completion Liquidated Damages, Final Completion Liquidated Damages, or both.

7. **Payment Procedures**

a. Contractor shall submit Application for Payment in accordance with the General Conditions and Applications for Payment will be processed by the Owner's Representative and Owner as provided in the General Conditions.

b. Contractor hereby consents to the Owner deducting from amounts otherwise payable to the Contractor and retaining any and all amounts payable to the Owner by the Contractor for any reason stated in the Contract Documents assessed or payable through the date payment is due Contractor from Owner.

If the amount payable to the Owner by the Contractor exceeds the amount otherwise payable to Contractor by Owner, Contractor shall make payment thereof to Owner within fourteen (14) days following issuance by Owner of Notice of payment due.

8. **Interest**

All funds not paid when due as provided by Parts 8, 10 and 11 of the General Conditions shall bear interest at the rate of 0.5 percent per month.

9. **No Assignments**

No assignment by either party hereto of any rights or interest under any of the Contract Documents will be effective unless in writing signed by the authorized representative of each party; and no assignment will release or discharge the assignor from any responsibility under the Contract Documents. Owner shall be under no obligation to consent to any request by Contractor for approval of an assignment as the Contractor's obligations are intended not to be assignable.

10. **Governing Law**

This Agreement and each of the Contract Documents shall be governed and construed in accordance with the laws of the Commonwealth of Virginia without reference to conflict of laws principles. This Contract and the Work performed hereunder shall be governed in all respects by the laws of the Commonwealth of Virginia and the jurisdiction, forum, and venue for any litigation with respect thereto shall be in the Circuit Court for Arlington County, Virginia, and in no other court. In performing the Work under this Contract, Contractor shall comply with applicable federal, state, and local laws, ordinances, and regulations.

11. **Binding Agreement**

Owner and Contractor each binds itself, its successors and assigns to the other, its successors and assigns, in respect of all covenants, terms, conditions and obligations contained in each of the Contract Documents.

Signatures Appear on the Following Page

IN WITNESS WHEREOF, the parties hereto have caused this Contract to be signed by their duly authorized officers.

Contractor

By: _____

Title: _____

_____
Dated

Arlington Public Schools

By: _____ _____
David J. Webb, C.P.M.

Title: Director of Procurement

_____
Dated

End of Agreement

Standard Bid Bond

Bond #:_____
Amount: _____

KNOW ALL MEN BY THESE PRESENTS: That

_____

_____

(insert full name or legal title of Contractor and address)

as Principal, and

_____

(insert full legal title of the Surety)

a corporation duly organized under the laws of the State of _____ and qualified to do business in Virginia, having its principal place of business at

_____

_____, as Surety, are held and firmly bound unto the Arlington Public Schools as Obligee, in the amount of _____ Dollars($_____), for the payment whereof Principal and Surety bind themselves, their heirs, executors, administrators, successors and assigns, jointly and severally, firmly by these presents.

WHEREAS,

Principal has submitted a Bid to Obligee dated _____, 20___, in response to an Invitation to Bid issued by Principal titled for a project identified as **Jefferson Middle Gym Roof Replacement, located at 125 S. Old Glebe Road, Arlington, VA, 22204, Bid #17FY20.**

NOW THEREFORE, THE CONDITION OF THIS OBLIGATION is such, unless permitted to be withdrawn as provided by the Instructions to Bidders,

A. If the Bid shall remain open for a period of not less than one hundred twenty (120) days following opening of the Bids and be rejected, or in the alternate

B. If the Bid shall remain open for a period of not less than one hundred twenty (120) days following opening of the Bids and be accepted and the Principal shall execute and deliver a Contract in the form of Contract identified in the Invitation to Bid and Instructions to Bidders, properly completed in accordance with the Bid, and shall in compliance with the requirements of the Contract Documents furnish a Performance Bond, Payment Bond, and all required insurance for its faithful performance of the Contract, and for the payment of all persons performing labor or furnishing materials in connection therewith, and shall in all other respects perform the agreement created by the acceptance by Principal of the Bid as set

forth in the Bid Form,

THEN this Obligation shall be void; otherwise the same shall remain in force and effect, it being expressly understood and agreed that the liability of the Surety for any and all claims hereunder shall, in no event, exceed the amount of this Obligation as herein stated. Provided, however, that in addition to the amount of this Obligation as herein stated, the Surety shall be liable for all costs and attorneys' fees incurred by the Obligee in enforcing the obligations hereunder.

The Surety, for value received, hereby stipulates and agrees that the obligations of the Surety and its Bond shall in no way be impaired or affected by any extension of the Bid opening date or time or by any extension of the time within which the Owner may accept such Bid, and the Surety does hereby waive Notice of any such extensions and consents thereto.

The Surety hereby certifies that this Bid security shall be effective at the time of the subject Bid opening.

Signed and sealed this _____ day of _____, 20_____.

_____
Principal

_____
Witness

By: _____
Title

_____ (SEAL)
Surety

_____
Resident Virginia Agent

By: _____
Title

AFFIDAVIT AND ACKNOWLEDGMENT OF SURETY

COMMONWEALTH OF VIRGINIA
CITY/COUNTY OF _____, To-wit:

I, the undersigned notary public, do certify that _____ personally appeared before me in the jurisdiction aforesaid and made oath that he/she is attorney-in-fact of the _____ (Name of Surety), that he/she is duly authorized thereby to execute in its behalf a certain (payment) bond in the sum of _____ _____ Dollars ($_____), dated the _____ day of _____, 20___, wherein Arlington Public Schools is the Obligee, _____ is the Principal and _____ is Surety, by virtue of a certain power of attorney made by said Surety, dated _____ and _____ RECORDED in the Clerk's Office of the Circuit Court of _____, Virginia, in Deed Book _____, Page _____, or Instrument # _____ / NOT RECORDED (check applicable box); that the

said power of attorney has not been revoked; that the said Surety is legally qualified to do business in Virginia; and, that the said _____ thereupon, in the name and on behalf of the said Surety, acknowledged the aforesaid bond as its act and deed.

Given under my hand this _____ day of _____, 20_____
.

_____
Notary Public

My Commission expires: _____

End of Standard Bid Bond

General Conditions

PART 1 DEFINITIONS

1.1 **ACCEPTANCE OF BID**: Dollar amount of Bid is acceptable. Contractor should proceed with bond requirements.

1.2 **AMENDMENT**: Written authorization executed by the Procurement Agent, acknowledging the Change Order(s) Modification, revised Contract Sum and current Contract Period.

1.3 **CHANGE ORDER**: A written order to the Contractor, signed by the Owner and the Owner's Representative, which authorizes a change in the Work, and adjustment to the Contract Sum, and/or an adjustment to the Contract Period, if any. A **Unilateral Change Order** is a Change Order signed only by the Owner and the Owner's Representative addressing any Modification to the Contract Sum or the Contract Period to which the Owner agrees. A **Mutual Change Order** is a Change Order signed by both the Owner and the Owner's Representative and by the Contractor reflecting agreement on all terms, conditions and requirements set forth therein. A Unilateral Change Order may be converted to a Mutual Change Order upon agreement being reached between the parties. Change Orders shall be initiated and processed as set forth in Part 9 of this subsection and Specification Section 01 2600. The latest edition of the AIA Standard Form G701 shall be utilized and shall be provided by the Owner's Representative.

1.4 **CONTRACT:** The signed Agreement between Owner and Contractor is the Contract.

1.5 **CONTRACT DOCUMENTS**: The Contract Documents consist of the following documents:

A. The signed Agreement between Owner and Contractor,

B. The General Conditions,

C. The Drawings and Specifications,

D. Bid Documents and Addenda,

E. The Notice of to Proceed issued by the Owner to the Contractor,

F. Modifications, issued after execution of the Contract, and

G. In case of a conflict between the Contract Documents, the order of precedence shall be as set forth in the Contract.

1.6 **CONTRACT PERIOD**: The period allotted in the Contract Documents for Substantial Completion, and thereafter Final Completion, of the Work, together with any extension of time granted in accordance with the provisions of the Contract Documents. Contract Period may also be referred to as "Contract Time" in the Contract Documents. Both terms have the same meaning.

1.7 **CONTRACT SUM**: The total amount payable to the Contractor for performance of the Work. The Contract Sum is stated in the Contract and shall include any adjustments granted in accordance with the provisions of the Contract Documents.

1.8 **CONTRACTOR**: The individual, firm or organization which contracts with the Owner to perform the Work. As employed herein, the term "Contractor" may refer to an individual, firm or organization, or to the Contractor's authorized representative.

1.9 **DATE OF FINAL COMPLETION**: or **FINAL COMPLETION DATE:** The date certified by the Owner's Representative as the date upon which the Work, or a Phase of the Work, is completely finished pursuant to the requirements of the Contract Documents, which date shall occur within thirty (30) calendar days after the Date of Substantial Completion of all Work, or a Phase of the Work, unless otherwise specified in the Contract Documents.

1.10 **DATE OF SUBSTANTIAL COMPLETION**: or **SUBSTANTIAL COMPLETION DATE:** The date certified by the Owner's Representative as the date upon which the Work, or a Phase of the Work, has been completed pursuant to the requirements of the Contract Documents.

1.11 **DAY**: The term "day" or "Day" shall mean "calendar day"; unless otherwise noted. When any provision in the Contract Documents establishes a time within which an action must be taken or a right must be exercised, if the last Day falls on a Saturday, Sunday, or Holiday, the deadline thereby established shall be extended to the first Arlington Public Schools Normal Working Day thereafter.

1.12 **FINAL COMPLETION**: "Final Completion" or the state of being "Finally Complete" shall mean total completion of all Work required by or reasonably contemplated by the Contract Documents. The same requirements shall be satisfied as to a defined portion of the Work for which a separate Date of Final Completion is established. More specific requirements for Final Completion as to the Work or a defined portion thereof may be set forth in the Specifications.

1.13 **GENDER AND PLURAL**: Whenever the Contract so admits or requires, all references to one number shall be deemed to extend to and include the other number, whether singular or plural, and the use of any gender shall be applicable to all genders.

1.14 **HOLIDAY:** Holidays recognized by the Owner which shall not be considered Normal Working Hours are as follows: New Year's Eve Day, New Year's Day, Martin Luther King, Jr. Day, Presidents Day, Memorial Day, Independence Day, Labor Day, Columbus Day, Veterans Day, Thanksgiving Day and the following Friday, Christmas Eve Day, and Christmas Day. Actual dates should be based on the most current Arlington Public Schools calendar.

1.15 **MODIFICATION:** Any written change to any provision of the Contract Documents made after Bid Closing, whether by Work Order, Change Order or other means provided by the Contract Documents.

1.16 **NORMAL WORKING DAY:** See "Working Day."

1.17 **NOTICE**: Notice or a requirement to "Notify" shall mean written notice. Written Notice shall be deemed to have been duly served if:

A. Delivered by mail, courier, e-mail, or facsimile transmission to the Contractor's office at the Project Site or to the business address of the Contractor as stated in its Proposal; or if delivered in person to the Contractor's foreman or superintendent for the Project, or to any officer or director of the Contractor.

B. Delivered by mail, express mail or hand delivered to the office of the Procurement

C. Agent, Arlington Public Schools, Syphax Education Center, 2110 Washington Boulevard, Arlington, Virginia 22204 or, when expressly so stated in the Contract Documents, delivered by mail, express mail, email or hand delivery to the Owner's Representative.

D. Any requirement in the Contract Documents that an action be taken in writing shall require transmission of the writing to the other party in the form required of a Notice, unless otherwise expressly stated.

E. All notices shall be given to the address shown in the Contract or such other address/addresses as may be provided by Notice after execution of the Contract. Notice sent by registered or certified return receipt mail shall be deemed received on the date shown on the return signed by the receiving party. Notice sent by courier or by hand delivery shall be deemed received on the date shown on the delivery receipt signed by the receiving party. Notice sent by email or facsimile transmission shall be deemed received at 9:00 A.M. on the first Working Day following the date of the transmission.

1.18 **NOTICE TO PROCEED:** A written Notice from the Owner to the Contractor, which gives consent for commencement of the Work. For projects with phased Work, a Notice to Proceed will be issued prior to the commencement of each Phase, if a Notice to Proceed is required by the Contract Documents. Unless otherwise provided herein, Work shall commence on the date specified in the Notice to Proceed and all Project Schedules shall be based upon that date.

1.19 **OWNER**: Arlington Public Schools (APS) and employees authorized to represent APS.

1.20 **OWNER'S CONSTRUCTION PROJECT MANAGER**: APS' employee authorized to act on behalf of the Owner regarding matters related to the Contract, Contract Documents, and on-site construction. The Project Manager may designate on-site construction managers as Owner's Representative (Construction Manager) to act on the Owner's behalf.

1.21 **OWNER'S REPRESENTATIVES**: Owner's Representatives include the project Architect as identified in the Agreement and on-site Construction Manager who have been designated to act on behalf of the Owner. Unless otherwise expressly stated or directed by the Owner, reference herein to Owner's Representative shall mean either the project Architect or the Construction Manager. Contractor will be given written direction regarding the individuals employed by either the Architect or the Construction Manager with authority to exercise the duties of the Owner's Representative. The duties and authority of Owner's Representative are set forth in Part 3 of these General Conditions. Notwithstanding any other provision in the Contract Documents to the contrary, any Modification of the Contract Sum or of the Contract Period may be made only by writing signed by the Arlington Public Schools Purchasing Agent or the designee of thereof as identified to the Contractor by writing issued by and signed by the Arlington Public Schools Purchasing Agent.

1.22 **PROJECT**: The construction services as performed by the Contractor, in accordance with the Contract Documents; collectively all of the improvements contemplated by the Contract; synonymous with the term "Work" as the context may require.

1.23 **PROJECT SCHEDULE:** The Critical Path Method Baseline Schedule for the Project as a whole established and updated by Monthly Project Schedule Update all in accordance with the provisions of Specifications Section 01 3200. The term "Project Schedule" does not include any Recovery

Schedule which may be directed by Owner unless incorporated into the Project Schedule pursuant to the Project Schedule Revisions procedures set forth in Specifications Section 01 3200.

1.24 **PROJECT SITE**: The location at which the improvements which are the subject of the Work are to be or are being constructed. May also be referred to as "Site."

1.25 **PROPOSED MODIFICATION**: A request by the Owner or the Owner's Representative for the Contractor's estimate of cost for a contemplated change to the Work. Such request shall be initiated in writing and processed as set forth in Specification Section 01 2600.

1.26 **SUBCONTRACTOR**: Any individual, firm or organization other than an employee of the Contractor, who contracts with the Contractor to furnish or who actually furnishes labor, materials, services or equipment, or any combination thereof to the Contractor in connection with the Work.

1.27 **SUB-SUBCONTRACTOR**: Any individual, firm or organization, other than an employee of the Contractor or of a Subcontractor, who contracts with a Subcontractor to furnish, or who actually furnishes labor, materials, service or equipment, or any combination thereof to a Subcontractor.

1.28 **SUBSTANTIAL COMPLETION**: "Substantial Completion" or the state of being "Substantially Complete" shall be that degree of completion of the Work which is sufficient to provide the Owner, in its sole discretion, with the full time use of the Project in all manners or modes of operation and for the purpose or purposes for which it was intended. The same requirements shall be satisfied as to a defined portion of the Work for which a separate Date of Substantial Completion is established. More specific requirements for Substantial Completion as to the Work or a defined portion thereof may be set forth in the Contract Documents.

1.29 **SURETY**: Any person, firm or corporation that has executed as Surety the Contractor's performance or payment bonds securing performance of this Contract or providing for protection of claimants who have and fulfill contracts to supply labor or materials to the Contractor or to a Subcontractor in connection with the Work. The Surety shall be authorized to do business in the Commonwealth of Virginia and shall be listed on the United States Treasury Department's latest Circular 570.

1.30 **WARRANTY PERIOD:** All warranties and guarantees against any defect in the Work shall apply from the date of Final Completion of the Work and shall continue for a period of one (1) year thereafter. Provided, however, in the event the Owner occupies and commences using in the manner intended any designated portion of the Work prior to Final Completion thereof, the one (1) year Warranty as to such defined portion of the Work shall commence on the date the Owner commences such occupancy and use. Provided further, in the event the Contract Documents require a Warranty in excess of one (1) year, the longer term shall apply as applicable.

1.31 **WORK**: Everything explicitly or implicitly required to be furnished or performed under the Contract Documents.

1.32 **WORK ORDER**: A written directive to the Contractor issued on or after the Effective Date of the Agreement which directs changes in the Work and will state the basis for adjustment, if any, in the Contract Sum, or Contract Period, or both. A Work Order shall be used in the absence of total agreement on the terms of a Change Order or when, in the Opinion of the Owner, the time needed to process a Change Order would adversely affect progress on the job. Upon receipt of a Work Order the Contractor shall promptly proceed with the change in the Work involved and advise the Owner's Representative of the Contractor's agreement or disagreement with the method, if any, provided in

the Work Order for determining the proposed adjustment in the Contract Sum or Contract Time. Even if the Contractor disagrees with the terms of the Work Order, the Contractor must proceed with the changes as directed.

1.33 **WORKING DAY:** The hours between 7:00 A.M. and 5:00 P.M., local prevailing time, Monday through Friday, excluding Owner Holidays. Also may be referred to as "Business Day."

PART 2 EXECUTION AND INTENT OF THE CONTRACT

2.1 **CONTRACT SIGNATURE**: Four (4) copies of the Agreement Between the Owner and the Contractor shall be signed by both the Owner and the Contractor.

2.2 **EXECUTION OF AGREEMENT**: Execution of the Contract by the Contractor is a certification that the Contractor has examined the Project Site, become familiar with local conditions under which the Work is to be performed and correlated personal observations with the requirements of the Contract Documents, and has examined all Contract Documents, as required by the Contract.

2.3 **INTENT OF THE CONTRACT DOCUMENTS**: The intent of the Contract Documents is to include all items necessary for the proper management, execution and completion of the Work, including without limitation, all labor, materials, equipment and furnishings required in connection therewith. The Contract Documents are complementary, and what is required by one shall be as binding as if required by all. Any doubt as to whether any work is within the scope of the Contract shall be resolved in favor of an interpretation that the Work is within the scope of the Contract. Use of the term "include" or "including" shall be deemed to mean "include without limitation," "including but not limited to," and similar expansive intent.

2.4 **DRAWINGS AND SPECIFICATIONS:**

A. The subdivision of the Drawings and Specifications into divisions, Sections and articles is for the purpose of ease of reference only and shall not control the Contractor in dividing the work among Subcontractors or in establishing the extent of Work to be performed by any trade. The Contractor shall be responsible for segregating the Work among the various trades.

B. The Specifications shall serve to amplify the requirements of materials and assemblies. The mention in any Section of the Specifications of any article or operation requires that the Contractor shall provide all such items indicated on, or reasonably inferred from, the Drawings, furnishing for such purpose all labor, materials and equipment required in connection therewith. Omission of any article, operation, or detail does not relieve the Contractor of the responsibility for completion of the work reasonably intended by the Drawings and Specifications to be included in the Contract.

C. In the case of conflict or inconsistency between the Drawings and Specifications or within Drawings, or Specifications not clarified by Addendum or by a response to a request for clarification, the Contractor shall: (1) provide the better quality or greater quantity of Work, or (2) comply with the more stringent requirement either or both in accordance with the Owner's Representative's interpretation. The Contractor shall notify the Owner's Representative of discrepancies found before materials are fabricated or Work performed.

D. The Contractor shall adhere to dimensions though differing from scale measurements. In the absence of dimensions or in case of doubt as to the proper measurement, consult the Owner's Representative. Actual field dimensions where applicable are to be verified by the Contractor in the field prior to proceeding.

2.5 CONTRACT INTERPRETATIONS:

A. The Owner and/or the Contractor may request Contract interpretations in writing from the Owner's Representative. Such requests for interpretations must be submitted sufficiently in advance of the date upon which the interpretation is actually required by the Owner or the Contractor to allow the Owner's Representative to issue the interpretation so as not to delay the Work. Contractor shall be responsible for any delay resulting from failure to submit a request for interpretation in a timely manner. Written interpretations so requested shall be issued by the Owner's Representative in a manner commensurate with the timely execution of the Work, shall be consistent with the intent of the Contract Documents, and shall be in accordance with the approved Project Schedule.

B. The Contractor shall pay to Owner any amounts paid by the Owner's Representative for the Owner's Representative to evaluate and respond to the Contractor's request for interpretation, where such information was available to the Contractor from a careful study and comparison of the Contract Documents, field conditions, other Owner-provided information, Contractor-prepared coordination drawings, or prior Project correspondence or documentation.

2.6 COPIES AND OWNERSHIP OF CONTRACT DOCUMENTS:

A. The Contractor **will not** be provided with hard copies of the Drawings, Project Manual and other Documents prepared by the Owner's Representative. The Contractor will be provided access to an FTP site or online electronic storage site where electronic copies, in PDF file format, of the aforementioned documents will be available free of charge. The Contractor shall bear any costs of training required to access the FTP or electronic storage site. Should the mode of storage of electronic documents change during the Contract Period, the Contractor shall not be entitled to a change in the Contract Sum.

B. Original Drawings and Specifications are the property of the Owner, and the Contractor may not use the Drawings and Specifications produced pursuant to this Agreement for any purpose not relating to the Project without the Owner's consent.

C. The Owner's Representative (Architect) will make available to the Contractor, versions of the Drawings, Specifications, and Addenda in electronic format (i.e. PDF file formats). The Contract Drawings executed or identified in accordance with Paragraph 1.1. shall prevail in cases of an inconsistency with subsequent versions made through manipulative electronic means involving computers.

D. The Contractor shall not transfer or reuse Drawings and Specifications in electronic or machine-readable form without prior written consent of the Owner's Representative.

2.7 SUBSTITUTIONS: Substitutions are not permitted after Bids are received.

PART 3 OWNER'S REPRESENTATIVE

3.1 **ADMINISTRATION OF CONTRACT**: The Owner's Representative shall provide administration of the Contract in accordance with the Contract Documents between the Owner and the Owner's Representative.

3.2 **OWNER'S REPRESENTATIVE**: The Architect and the Construction Manager, shall serve as the Owner's representative during construction, until final payment is due, and with the Owner's concurrence, from time to time during the Warranty Period. The Owner's Representative shall advise and cooperate with the Owner and shall act on the Owner's behalf in accordance with the Contract Documents. The Owner shall issue instructions to the Contractor or, at the Owner's option, elect to have the Owner's Representative issue instructions to the Contractor.

3.3 **SITE VISITS**: The Owner's Representative shall have access to Work in process at all times to determine the progress and to assess the quality of the Work. Based upon its on-site evaluations, the Owner's Representative will advise the Owner of the progress of the Work and will endeavor to guard the Owner against defects and deficiencies in the Work. The Owner's Representative shall not have control over or charge of and shall not be responsible for construction methods, techniques, procedures, sequences or safety measures employed in connection with the Work. The Owner's Representative shall not be responsible for the failure of the Contractor, Subcontractors, or Sub-subcontractors to perform the Work in accordance with the Contract Documents.

3.4 **CERTIFICATION OF PAYMENTS**: Based upon the Owner's Representative's observations and evaluations of the Contractor's Application for Payment, the Owner's Representative shall review and certify the amounts due the Contractor from the Owner.

3.5 **INTERPRETATION OF CONTRACT**: The Owner's Representative shall interpret the Contract requirements in accordance with Paragraph 2.5, and shall serve as an advisor to the Owner concerning the performance of the Work. The presence of any onsite Owner's Representative shall in no way constitute an approval of means, methods or materials which do not conform to the requirements of the Contract Documents.

3.6 **REJECTION OF WORK**: The Owner's Representative and/or the Owner shall have the authority to reject Work that does not conform to the requirements of the Contract Documents. In the event rejected Work requires additional testing or additional inspections, Contractor shall pay the Owner all amounts paid by the Owner to the Owner's Representative and other third-party consultants for any such additional testing or inspections. The Owner's Representative and/or the Owner shall have the authority to order special inspections or tests, regardless of whether or not the Work has been fabricated, installed or completed. Such special inspections or tests shall be performed at the Contractor's sole expense and no increase to the Contract Sum. No responsibility or duty of the Owner's Representative and/or the Owner to the Contractor, Subcontractors, or Sub-subcontractors shall be created by this authority or by good faith decisions rendered in the exercise of this authority. At all times the Contractor is fully responsible for the quality of the Work and full and complete performance of the terms and specifications of the Contract. The Owner has the right to withhold from payment otherwise due the Contractor the cost of correcting the deficiencies, including any charges for special inspections or tests as well as charges by the Architect, plus a markup of ten percent (10%) to cover administrative costs. If the balance due to the Contractor is not sufficient to cover the amount due the Owner, the Contractor shall pay to the Owner the difference upon demand by Owner.

3.7 **ADMINISTRATION OF CONTRACT**: The Owner's Representative shall prepare Work Orders, Change Orders, shall observe the Work to determine the Dates of Substantial and Final Completion, shall review all required documents submitted by the Contractor, and shall issue Certificates of Substantial Completion and Final Completion in accordance with the provisions of Paragraphs 11.6 and 11.7.

PART 4 OWNER

4.1 **SITE SURVEYS**: The Owner shall make available to the Contractor such information as the Owner has in its possession describing the physical characteristics, legal limitations and utility locations for the Project Site; provided, however, that the provisions of such information shall not relieve the Contractor from its obligation to inspect for itself and determine the site conditions. The Owner makes no representations whatsoever concerning the quality or contents of any information so provided and the Contractor relies on such information solely at its own risk.

The Contractor shall confirm locations of existing utilities by performing test pits, or using other means and methods as outlined by the Commonwealth of Virginia Miss Utility laws, at the Contractor's sole expense and no increase to the Contract Sum. Any discrepancies found with locations of existing utilities will be brought to the attention of the Owner and coordinated around the new Work in its design intent at the Contractor's sole expense and no increase to the Contract Sum. All discrepancies will be noted on the As-Builts and documented at the Contractor's sole expense and no increase to the Contract Sum.

4.2 **REJECTION OF WORK**: The Owner shall have the right but not the obligation to reject Work in accordance with Paragraph 3.6 or of any other provision of the Contract Documents, without waiver of the Contractor's obligation to fully perform under the Contract.

4.3 **CERTIFICATION OF PAYMENTS**: The Owner shall have the right but not the obligation to review, revise, and approve the Owner's Representative's certifications concerning payment.

4.4 **RIGHT TO STOP WORK/RIGHT TO CORRECT DEFICIENCIES**: If the Contractor does not correct non-complying Work, or is consistent in not supplying and/or furnishing labor, material, and equipment necessary to Work performance, the Owner has the right to order the Contractor to stop the Work until such time as the cause of the order has been corrected. Should the Contractor default, fail to perform the Work, or improperly perform the Work, the Owner has the right, after three (3) days written notice, to correct the deficiencies. The Owner may deduct from amounts otherwise due Contractor the Owner's cost of correcting the deficiencies, including any charges for special inspections or tests as well as charges by the Architect, plus a markup of ten percent (10%) to cover administrative costs. If the balance due to the Contractor is not sufficient to cover the amount due the Owner, the Contractor shall pay to the Owner the difference upon demand by Owner. The Owner's exercise of the right to correct deficiencies shall in no way prejudice or limit any other remedy that the Owner may have.

PART 5 CONTRACTOR

5.1 GENERAL REVIEW OF CONTRACT DOCUMENTS:

A. The Contractor shall perform all Work and shall furnish, at its own cost and expense, all labor, materials, equipment, and other facilities, except as herein otherwise provided, as may be necessary and proper for performing and completing the Work in strict compliance with the requirements of the Contract Documents. The Contractor shall be responsible for the entire Work until Final Completion of all Work has been achieved.

B. Unless otherwise provided herein, the Work shall be performed in accordance with the best modern practice and with materials and workmanship of highest quality.

C. Supervisor and Construction Procedures: The Contractor shall supervise and direct the Work and coordinate the Work with that of separate Contractors using Contractor's best skill and attention, with at least the use of an onsite full-time superintendent, onsite full-time project engineer and full-time project manager. Unless otherwise noted herein, the Contractor shall be solely responsible for and have control over construction means, methods, techniques, sequences and procedures and for coordinating all portions of the Work under the Contract. Unless otherwise expressly provided, the means and methods of construction shall be such as the Contractor may choose; provided, however, that the Contractor shall employ adequate and safe procedures, methods, structures and equipment. Neither the Owner's Representative's approval nor its failure to exercise its right of approval shall relieve the Contractor of its obligation to accomplish the result intended by the Contract, nor shall the Owner's Representative's approval or failure to approve create a cause of action for damages against the Owner's Representative or the Owner, or provide a defense by the Contractor in any case of action by the Owner against the Contractor.

D. The Contractor shall study and review the Contract Documents and shall compare them with each other and with such information made available by the Owner. The Contractor shall be responsible for advising the Owner's Representative and the Owner of any errors, inconsistencies or omissions discovered or which in the exercise of due diligence as a reasonably competent contractor reasonably should have been discovered by it.

E. The Contractor shall be responsible for all costs or delays resulting from the Contractor's or a Subcontractor's failure to obtain and review Contract Documents provided by the Owner.

F. The Contractor shall employ on the site at all times at least one person in a supervisory capacity fluent in English to communicate with the Owner's Representatives and capable of communicating with all workers on the Project site to facilitate compliance with all necessary instructions and safety requirements.

5.2 CHARACTER AND COMPETENCY:

A. The Contractor and its Subcontractors represent a duly organized and licensed entity which employs qualified and experienced personnel who specialize in performing the type of construction services required hereunder. The Contractor agrees that it and its Subcontractors shall provide a sufficient number of personnel who are suitably qualified and experienced and who are in all respects acceptable to the Owner to perform the Work in an efficient and timely manner. The Contractor represents that it and its Subcontractors are capable in all

respects (including the possession of sufficient financial resources to provide fully for the payment of employees) of performing the Work and agrees to provide construction services of high quality. The Contractor agrees that it and its Subcontractors shall diligently and conscientiously devote their resources to the performance of the Work.

B. The Owner, upon written notice to the Contractor, and in the Owner's sole discretion, shall have the right to direct the Contractor and its Subcontractors to remove an employee permanently from the Project Site for any reason. Any individual who is removed from the Project Site pursuant to this Section may not return without specific permission of the Owner.

C. The Contractor will ensure that no Work shall be performed in occupied areas during school hours unless express written approval has been granted by the Owner and proper safety precautions have been exercised to isolate the area of the Work.

D. Tobacco products, alcoholic beverages, illegal drugs, and weapons are prohibited on the Project Site and will constitute grounds for immediate removal of any employee of the Contractor or of any Subcontractor from the Project Site. Sexual harassment, profanity, and inappropriate behavior are not permitted on the Project Site and will constitute grounds for immediate removal of any employee of the Contractor or of any of its Subcontractor.

E. No Smoking Policy on Arlington Public Schools' property: Contractors, including their employees or agents, performing work on Arlington Public Schools' property shall abide by the no-smoking policies applicable to the property.

F. Drug-Free Workplace. For the purposes of this Contract drug-free workplace means a site for performance of Work done in connection with a specific contract awarded to a contractor, the employees of whom are prohibited from engaging in the unlawful manufacture, sale, distribution, dispensation, possession or use of any controlled substance or marijuana during the performance of the Contract. During the performance of this Contract, the Contractor agrees to:

1. Provide a drug-free workplace for the Contractor's employees;

2. Post in conspicuous places, available to employees and applicants for employment, a statement notifying employees that the unlawful manufacture, sale, distribution, dispensation, possession, or use of a controlled substance or marijuana is prohibited in the Contractor's workplace and specifying the actions that will be taken against employees for violations of such prohibition;

3. State in all solicitations or advertisements for employees place by or on behalf of the Contractor that the Contractor maintains a drug-free work place; and

4. Include the provisions of the foregoing clauses in every subcontract or purchase order of over $10,000, so that the provisions will be binding upon each Subcontractor.

G. The Contractor shall have no portion of the Work performed by any Subcontractor or Sub-subcontractor which does not have a current Virginia Contractor's License of the Class and Specialty required for performance of that portion of the Work.

H. Contractor Certification Regarding Criminal Convictions

1. As a condition of awarding a contract for the provision of Work that require the Contractor or his employees to have direct contact with students on school property during regular school hours or during school-sponsored activities, the Arlington School Board shall require the Contractor to provide certification that all persons who will provide such services have not (i) been convicted of a felony or of any offense involving the sexual molestation or physical or sexual abuse or rape of a child; (ii), as more particularly set forth in Va. Code Ann. Section 18.2-370.4 no person shall perform any part of the Work on the property of an existing elementary or secondary school who has been convicted of rape, forcible sodomy or object sexual penetration, all of a child under 13, during the commission of abduction, in the course of entering a dwelling with intent to commit murder, rape, robbery, arson, larceny, assault and battery, or any felony, or of aggravated malicious wounding; and (iii) as more particularly set forth in Va. Code Ann. Section 18.2-370.5, no person shall perform any part of the Work on the property of an existing elementary or secondary school during school hours or during school-related or school sponsored activities who has been convicted of a sexually violent offense. The Contractor certification covers its employees, its Subcontractors and the employees thereof.

2. The Contractor certification shall also cover its employees, its Subcontractors and employees thereof, assigned to the Work after Contract award. The Contractor, upon demand from APS, shall provide all information which allowed for the Contractor's certification.

3. The Contractor shall submit to the Owner a completed Contractor Certification Regarding Criminal Convictions on the form set forth below. Contractor shall be responsible for making such additional copies of the form as may be required.

CONTRACTOR CERTIFICATION
REGARDING CRIMINAL CONVICTIONS

This form must be completed by an authorized official for any organization contracting to provide services under a contract with the Arlington Public Schools or any of its schools or departments, or any subcontractor under such contractor.

The completed form from the Contractor is a condition precedent to the award of the Contract.

As the official authorized to enter into this Contract on behalf of my organization, I certify that:

1. No employee of the organization who will be in the presence of students on school property during regular school hours or during school-sponsored activities during the performance of this Contract has been convicted of a felony or of any offense involving the sexual molestation, physical or sexual abuse or rape of a child; and
2. As more particularly set forth in Va. Code Ann. Section 18.2-370.4, no employee who has been convicted of rape, forcible sodomy or object sexual penetration, all of a child under 13, during the commission of abduction, in the course of entering a dwelling with intent to commit murder, rape, robbery, arson, larceny, assault and battery, or any felony, or of aggravated malicious wounding will enter upon the property of an existing elementary or secondary school in the performance of the Work; and
3. As more particularly set forth in Va. Code Ann. Section 18.2-370.5, no employee who has been convicted of a sexually violent crime shall enter upon the property of any existing elementary or secondary school during school hours or during school-related or school sponsored activities in the performance of the Work.

I understand that a materially false statement regarding this certification is a Class 1 misdemeanor and that conviction of such misdemeanor shall result in the revocation of this Contract and of any related license that I may hold. I declare under penalty of perjury that the foregoing statements are true and correct.

_____	_____
Name of Firm	Signature
_____	_____
	Name and Title (please type or print)
_____	
Address of Firm	
_____	_____
Telephone	Date

5.3 **PERMITS, FEES AND NOTICES:**

A. The Contractor shall comply with all local, state and federal laws, rules or regulations or Arlington County ordinances applicable to this Contract and the Work to be performed hereunder. The Contractor shall also obtain, at its expense, all licenses of any type, permits, inspections, licenses, and other authorizations necessary for the prosecution of the Work, and shall pay all fees associated therewith, except that the Owner shall obtain, at its expense, the building permit and any easement agreements necessary and indispensable to the completion of the Project.

B. The Contractor shall be responsible for giving all notices and complying with all laws, ordinances, rules, regulations and directives of any public authority bearing on the performance of the Work. Should the Contractor determine that the Contract Documents, or any of them, do not conform with such laws, ordinances, rules, regulations and directives in any respect, it shall promptly inform the Owner's Representative of such fact in writing. Any required changes shall be made by suitable approved Modification. If the Contractor performs any Work when it knew or in the exercise of reasonable care should have known it to be in conflict with such laws, ordinances, rules and regulations without notifications to the Owner's Representative, the Contractor shall accept all responsibility and bear all cost relating thereto.

C. The Contractor shall comply with all conditions in the approved Use Permit for the Project and shall comply with all requirements for Permits and Occupancy. The Contractor shall meet all the requirements of the Use Permit to achieve all required Permits and Certificates of Occupancy for the Project, Interim, Partial or Final.

5.4 **RESPONSIBILITY TO COMPLY WITH OWNER'S SOFTWARE:** The Contractor shall be responsible as a part of the Work to use such software or software products as may be designated by the Contract Documents or otherwise directed for use by the Owner in performing all obligations, and exercising all rights, under the Contract Documents. Should there be any changes in any such software requirements during the Contract Period such change shall not be the basis of any claim of any sort by Contractor.

5.5 **RESPONSIBILITY FOR THOSE PERFORMING THE WORK**: The Contractor shall be responsible and accountable to the Owner for the acts and omissions of the Contractor's employees in connection with the performance of the Work and for any Subcontractors, Sub-subcontractors, or other persons performing any of the Work. The Contractor shall be responsible for maintaining the cleanliness on the Project Site at all times and shall exercise dust control when required.

5.6 **DRAWINGS AND SPECIFICATIONS AT THE SITE**: The Contractor shall maintain one full size copy of all Drawings, Specifications, Addenda, approved Shop Drawings, Change Orders and other Modifications at the Project Site. The Contractor will also retain all permits sets in good condition at the Project Site. All of the documents are to be kept in good order and marked to record all changes made during construction. The documents shall be made available to the Owner and Owner's Representative during performance of the Work. Upon completion of the Work, these As-Built drawings together with all changes and revisions made during construction shall be delivered to the Owner's Representative, with one digital copy.

5.7 **SHOP DRAWINGS:**

A. The Contractor shall prepare, review, approve and submit to the Owner's Representative Shop Drawings and similar submittals required by the Contract Documents with promptness and in accordance with the Submittal Schedule so as to cause no delay in the Work or in the activities of the Owner or of separate Contractors. Submittals made by the Contractor which are not required by the Contract Documents may be returned without action. Shop Drawing submittals are to be prepared and submitted as set forth in Submittals, Section 01 3300 of the General Requirements to allow for review and approval by the Owner and not affect the procurement and installation of the submitted items. Contractor shall not be entitled to any Modification of the Contract Sum or of the Contract Period for any consequence of failure of the Contractor to comply strictly with any submittal requirement.

B. The Contractor shall perform no portion of the Work requiring submittal and review of Shop Drawings or similar submittals until the respective submittal has been approved by the Owner's Representative. Such Work shall be performed in accordance with the approved submittals.

C. By approving and submitting Shop Drawings and similar submittals, the Contractor represents that the Contractor has determined and verified materials, field measurements and field construction criteria related thereto and has checked and coordinated the information contained within such submittals with the requirements of the Work and of the Contract Documents.

D. The Contractor shall not be relieved of responsibility for deviations from requirements of the Contract Documents by the Owner's Representative's approval of Shop Drawings or similar submittals unless the Contractor has specifically informed the Owner's Representative in writing of such deviation at the time of submittal and the Owner's Representative has given written approval to the specific deviation. The Contractor shall not be relieved of responsibility for errors or omissions in Shop Drawings or similar submittals by the Owner's Representative's approval thereof.

E. The Contractor shall direct specific attention, in writing or on resubmitted Shop Drawings or similar submittals, to revisions other than those requested by the Owner's Representative on previous submittals.

F. Informational submittals upon which the Owner's Representative is not required to take responsive action may be so identified in the Contract Documents.

G. Additional requirements are contained in Submittals, Section 01 3300 of the General Requirements.

5.8 **INSPECTION OF WORK**: The Contractor shall be responsible for inspection of portions of Work or Phases of Work already performed hereunder, and for any pre-existing improvements not being replaced by Contractor which may impact Contractor's Work to determine that such portions are in proper condition to receive subsequent Work. In calling for inspections, the Contractor certifies that the Work being called for inspection meets the Contract and all building code and other statutory or regulatory requirements for completeness and quality. Irrespective of any third-party inspections, the

Contractor remains responsible for any after discovered defects in Work and is fully responsible for any delays and costs associated with such defective, insufficient or non-compliant Work.

5.9 **TESTS AND INSPECTIONS:** Unless otherwise provided in the Contract Documents, the Contractor shall be responsible for scheduling, compliance and costs associated with all tests or inspections required by local authorities having jurisdiction over the Project. The Contractor shall give the Owner and the Owner's Representative forty-eight (48) hours notice of the date and time of all required tests and inspections, including third party inspections under the purview of the Owner. Contractor shall assist and coordinate with third party inspections as required. Contractor shall notify the Owner and Owner's representatives of the cancellation of any inspections either by the local authorities or third-party inspections at least twenty-four (24) hours prior to the scheduled inspection. The Contractor shall be responsible for any associated added costs incurred due to cancellation of inspections, including but not limited to, any added cost required by local authorities or third-party inspectors due to a failure of inspection from deficient work or re-work resulting in the need for additional inspections.

5.10 **USE OF SITE:**

A. The Contractor shall confine the Work to areas of the Project Site permitted by the Contract Documents and shall comply with all applicable laws, ordinances, and permits related to the Project Site.

B. The Contractor shall establish and maintain security procedures controlling access to the Project Site. These procedures shall include the maintenance of a centrally located sign-in/sign-out log and the issuance of temporary security badges to short term visitors to the Site. The Owner's Representative (Construction Manager) will provide project specific hardhat stickers to all Contractor and Subcontractor employees assigned to work on the Project. Request for such stickers will not be valid unless accompanied with a completed "Contractor Certification Regarding Criminal Convictions" form.

C. Contractor workers shall not be present in any building and/or property owned or controlled by Owner without an Owner employee present nor without a Contractor issued APS hard hat sticker. In the event the Contractor desires to perform Work outside the Normal Working Hours in any building and/or property owned or controlled by Owner, Contractor shall notify the Owner in writing at least two working days prior to the intended Work. Upon approval from the Owner, which Owner may in its sole discretion decline to grant, the Work can be scheduled and the Owner will provide an employee to deactivate the building security system and remain present while Contractor workers are present. The cost for Owner employee support for overtime and weekend Work shall be paid by the Contractor to the Owner at a rate of $40 per hour per person. The cost of custodial support for Sunday or holiday work shall be paid by the Contractor to the Owner at a rate of $70 per hour per person. The Owner shall submit employee time sheets to the Contractor for review and verification. The cost for the Owners Representatives and/or consultants for Weekend or Holiday work shall be paid by the Contractor at rate of $150 per hour.

D. The Contractor shall maintain the building interior and exterior grounds of the Project Site in a clean and orderly state. The Contractor shall conduct periodic cleaning of the building interior, grounds, parking lots, driveways and sidewalks to assure that construction debris and unnecessary material and equipment do not accumulate. The Contractor shall also conduct periodic landscape maintenance of vegetated areas of the Site.

E. If in the Owner's sole discretion, the Project Site requires cleaning, landscape maintenance, or excess material removal, in total or in part, the Owner shall request the Contractor conduct the necessary cleaning and removal. Should the Contractor fail to accomplish the requested cleaning within three (3) Working Days, the Owner may use outside sources to conduct the cleaning or maintenance and maycharge the Contractor for all costs incurred by the use of the outside sources, plus a markup of ten percent (10%) to cover administrative costs.

F. The Contractor shall be responsible for the protection and security of the Project Site and shall have in place procedures to maintain positive control over vehicular and pedestrian traffic entering the Site and maintain a security perimeter around the construction Site by employing the following measures:

1. Completely enclose the Project Site at the outer limits of the construction area with a chain link fence with a minimum of six feet height. The fence shall be firmly anchored in the ground or into concrete bases to prevent movement, lifting, or passage beneath the fence. The fence shall be continuous and securely fastened at seams to prevent gaps greater the 3 inches in width at any point.

2. The perimeter fence may be penetrated to provide vehicular and pedestrian access. These entrance penetrations must be capable of being closed and locked and shall be constructed of chain link to a minimum of height of six feet when closed.

5.11 **INDEMNIFICATION**: The Contractor covenants to save, defend, hold harmless, and indemnify the Owner, Arlington School Board, and all of its elected and appointed officials, officers, employees, agents, departments, agencies, boards, and commissions from and against any and all claims, losses, damages, injuries, fines, penalties, costs (including court costs and attorney's fees), charges, liability, or exposure, however caused, resulting from, arising out of, or in any way connected with the Contractor's intentional, negligent, or grossly negligent acts or omissions in performance or nonperformance of its Work called for by the Contract Documents or otherwise occurring on the Project Site. This indemnification obligation shall survive the termination of this Contract.

5.12 **CONFLICT OF INTEREST:**

A. The provisions of Va. Code Title 2.2, Chapter 43, Article 6, Ethics in Public Contracting, §§ 2.2-4367 through 4377 are incorporated herein. These incorporated provisions supplement, but shall not supersede, other provisions of law including, but not limited to, the State and Local Government Conflict of Interests Act (§ 2.2-3100, et seq.), the Virginia Governmental Frauds Act (§ 18.2-498.1 et seq.), and Articles 2 (§ 18.2-438, et seq.), and 3 (§ 18.2-446, et seq.) of Chapter 10 of Title 18.2.

B. The incorporated provisions shall apply notwithstanding the fact that the conduct described may not constitute a violation of the State and Local Government Conflict of Interests Act.

5.13 **EMPLOYMENT DISCRIMINATION BY CONTRACTOR PROHIBITED**:
During the performance of this Contract the Contractor agrees as follows:

A. The Contractor will not discriminate against any employee or applicant for employment because of race, religion, color, sex, national origin, age, disability, or other basis prohibited

by state or federal law relating to discrimination in employment, except where there is a bona fide occupational qualification reasonably necessary to the normal operation of the Contractor. The Contractor agrees to post in conspicuous places, available to employees and applicants for employment, notices setting forth the provisions of this non-discrimination clause.

B. The Contractor, in all solicitations or advertisements for employees placed by or on behalf of the Contractor, will state that such Contractor is an Equal Opportunity Employer.

C. The Contractor will comply with the provisions of the Americans with Disabilities Act of 1990 as amended in 2008, and as may be amended thereafter, which prohibits discrimination against individuals with disabilities in employment and mandates their full participation in both publicly and privately provided services and activities.

D. Notices, advertisements, and solicitations placed in accordance with federal law, rule or regulation shall be deemed sufficient for the purpose of meeting the requirements of this section.

E. The Contractor will include the provisions of the foregoing paragraphs A, B, and C in every subcontract or purchase order of over $10,000.00, so that the provisions will be binding upon each Subcontractor or vendor.

F. Arlington Public Schools does not discriminate against faith-based organizations.

G. Nothing contained in this subsection shall be deemed to empower APS to require the Contractor to grant preferential treatment to, or discriminate against, any individual or any group because of race, color, religion, sex or national origin on account of an imbalance which may exist with respect to the total number or percentage of persons of any race, color, religion, sex or national origin employed by the Contractor, in comparison with the total number or percentage of persons of such race, color, religion, sex or national origin in any community or in the Commonwealth of Virginia.

PART 6 SUBCONTRACTORS

6.1 **ABSENCE OF CONTRACTUAL RELATIONSHIP**: Nothing contained in the Contract Documents shall operate to, or otherwise have the effect of, creating a contractual relationship between the Owner or the Owner's Representative and any Subcontractor.

6.2 **AWARD OF SUBCONTRACTS AND OTHER CONTRACTS FOR PORTIONS OF THE WORK:**

A. Unless otherwise specified in the Contract Documents, within fourteen (14) Days after the Notice to Proceed, the Contractor must submit a written statement to the Owner's Representative and the Owner setting forth the name and address, and telephone number of all proposed Subcontractors and the portion of the Work and materials for which each such Subcontractor is responsible. Should any proposed Subcontractor for a division and/or feature of work outlined in the Bid Form, Section 16, differ from the Subcontractor actually performing the Work, the Contractor must provide justification for the change to the proposed Subcontractor prior to any Work commencing by the Subcontractor. The Contractor also must furnish any other information intended to prove that the proposed

Subcontractor has the necessary facilities, skill, integrity, safety records, past experience and financial resources to perform the Work in accordance with the terms and conditions of the Contract Documents.

B. If the Owner finds, in its sole and absolute discretion, that the proposed Subcontractor is not qualified, the Contractor will be notified in writing within ten (10) days of the Owner receiving the request for approval of the Subcontractor. If no such notice is provided, the Owner shall be deemed to have accepted the Subcontractor. The Owner may retract its acceptance of any Subcontractor in the event such Subcontractor evidences an unwillingness or inability to perform its portion of the Work in strict accordance with the Contract Documents. Notice of such retraction will be given in writing to the Contractor. Upon receipt of notification of such rejection or retraction, the Contractor shall, within five (5) days, submit a new Subcontractor for the Owner's approval. No rejection of any Subcontractor as provided herein shall be the basis of any claim by the Contractor for any increase in the Contract Sum or any extension of the Contract Period.

C. The Contractor shall not enter into a contract in connection with the Work with any Subcontractor who or which has been rejected by the Owner and/or the Owner's Representative, and shall promptly terminate any contract with a Subcontractor who or which subsequently is rejected by Owner as provided herein.

D. Upon request, the Contractor promptly shall file with the Owner a copy of any one or more of its subcontracts. The Contractor shall cause appropriate provisions to be inserted in all subcontracts relative to the Work to bind Subcontractors to the Contractor in accordance with the terms of these Contract Documents insofar as applicable to the Work of Subcontractors, and to give the Contractor the same power to terminate any subcontract that the Owner may exercise to terminate the Contractor under the provisions of these Contract Documents. The Contractor shall bear all additional expenses due to its exercising of its rights under this paragraph.

E. The Owner's review or acceptance of Subcontractors as described herein shall not relieve the Contractor of any of its responsibilities, duties and liabilities under the Contract Documents. The Contractor shall be responsible to the Owner for the acts, defaults, or omissions of the Contractor's Subcontractors and of its Subcontractors' officers, authorized representatives and employees, and any other persons or entities performing any portion of the Work.

6.3 **SUBCONTRACTOR AND SUB-SUBCONTRACTOR AGREEMENTS**: Work performed by a Subcontractor or a Sub-subcontractor shall be defined by a signed agreement between a Subcontractor and the Contractor, or between a Sub-subcontractor and a Subcontractor, as applicable. Each such agreement shall:

A. Not contain a provision which purports to negate, conflict with or otherwise compromise the requirements of the Contract Documents;

B. Not contain a provision which purports to adversely affect the rights of the Owner and the Owner's Representative as such rights are defined in the Contract Documents;

C. Require timely processing of applications for payment and of claims for additional costs, damages, or time in order that the Contractor may in turn promptly process such applications or claims in conformance with the Contract Documents;

D. Waive the rights of either party against the other in regard to claims for fire or other peril covered by the property insurance described in Part 13 of these General Conditions. Such waiver shall not exclude either party from rightful access to the proceeds of such insurance;

E. Contain all provisions required by any of the Contract Documents to be included in a subcontract;

F. Make specific reference to the conditions of Paragraph 6.3 of this section as a mutually binding provision; and

G. Contain evidence indicating the Subcontractor's acceptance of the time allotted to perform its portion of the Work shall be submitted by the Contractor to the Owner's Representative within ten (10) days of the Subcontractor award.

H. The Contractor shall include in each subcontract the same requirements as Parts 5.2 H herein; require the completion by the Subcontractor of a form containing the same certifications as appearing in the Contractor Certification Regarding Criminal Activity on pages 11 and 12 herein; and require that the Subcontractor obtain from each of its Sub-subcontractors a similar Certification Regarding Criminal Activity .

6.4 PAYMENTS OF SUBCONTRACTORS:

A. Within seven (7) days after receipt of payment from the Owner, the Contractor shall:

1. Pay each Subcontractor an amount equal to the percentage of the Work attributable to such Subcontractor, less an amount equal to the percentage of payments to be retained by the Owner from the Contractor as retainage; or

2. Notify the Owner and the Subcontractor in writing of the intention to withhold all or part of the amount due a Subcontractor and state the reason for such withholding.

B. In the event the Contractor fails to submit a timely Application for Payment, and that failure is due exclusively to the actions of the Contractor, the Subcontractor shall have the right to be paid by the Contractor upon demand of the amounts due.

C. The Contractor shall pay interest on amounts owed to the Subcontractor which remain unpaid seven (7) days after the Contractor's receipt of payment from the Owner. Interest on such amounts shall accrue at the rate of one percent (1.0%) per month. Amounts owed the Subcontractor which have been withheld pursuant to Paragraph 6.4.A.2 shall not accrue interest.

D. Insurance proceeds received by the Contractor under the insurance policies described in Paragraph 13.1 shall be equitably distributed to the Subcontractors affected by the insured loss.

E. Information concerning percentages of completion of Work performed by a Subcontractor as shown in Application for Payment may be made available to that Subcontractor upon determination of the Owner.

F. The Contractor shall include in each subcontract a requirement that each Subcontractor shall be bound by and subject to the provisions of Paragraph 6.4 in regard to payments made to its Sub-Subcontractors.

G. The Contractor's obligations with respect to payments to its Subcontractors as outlined in Paragraph 6.4 above shall not operate to create any obligation or contractual relationship between the Owner or the Owner's Representative and any Subcontractor or Sub-subcontractor.

H. The Contractor's obligation to pay an interest charge to a Subcontractor is not an obligation of the Owner. A contract modification shall not be made for the purpose of providing reimbursement for the interest charge. A cost reimbursement claim shall not include any amount for reimbursement for the interest charge.

I. All provisions herein required to be included in a subcontract are intended for the benefit of Subcontractors.

PART 7 SEPARATE CONTRACTS

7.1 OWNER'S RIGHT TO AWARD SEPARATE CONTRACTS:

A. The Owner reserves the right to award separate contracts in connection with other portions of the Project or other construction or operations on the Project Site.

B. When separate contracts are awarded for different portions of the Project or other construction or operations on the Project Site, the term "Contractor" in the Contract Documents in each case shall mean the Contractor who executes each separate contract for construction.

C. At no additional cost to the Owner, the Contractor shall coordinate the Work with the activities of each separate Contractor. When directed to do so by the Owner, the Contractor shall participate with separate Contractors and the Owner in reviewing their separate construction schedules and shall make any revisions to incorporate that activity into the Project Schedule necessitated thereby.

D. The Contractor shall afford the Owner and any separate Contractors reasonable opportunity for introduction and storage of their materials and equipment and performance of their activities and shall connect and coordinate the Contractor's construction and operations with theirs as required by the Contract Documents.

E. If part of the Contractor's Work depends for proper execution or results upon construction or operations by a separate Contractor, the Contractor shall, prior to proceeding with that portion of the Work, promptly report to the Owner in writing any apparent discrepancies or defects in such construction or operations performed by a separate Contractor that would render it unsuitable for such proper execution and results. Failure of the Contractor to report such apparent discrepancies and/or defects shall constitute an acknowledgment that the separate Contractors' completed or partially completed construction is fit and proper to receive the Contractor's Work, except as to defects not then reasonably discoverable.

PART 8 MISCELLANEOUS PROVISIONS

8.1 **GOVERNING LAW**: The Contract Documents shall be governed by and construed in accordance with the laws of the Commonwealth of Virginia, without reference to conflict of laws principles. This Contract and the Work performed hereunder shall be governed in all respects by the laws of the Commonwealth of Virginia and the jurisdiction, forum, and venue for any litigation with respect thereto shall be in the Circuit Court for Arlington County, Virginia, and in no other court. In performing the Work under this Contract, the Contractor shall comply with applicable federal, state, and local laws, ordinances and regulations.

8.2 **SUCCESSORS, ASSIGNS AND LEGAL REPRESENTATIVES**: This Agreement shall not be assigned, sublet or transferred, in whole or in part, by operation of law or otherwise, by either of the parties hereto except with the prior written consent of the other. Owner shall be under no obligation to agree to any requested assignment, sublet or transfer. Owner will not consent to any requested assignment, sublet or transfer to any entity who or which was an unsuccessful bidder, who or which was deemed not to be qualified, or who or which was or is deemed not to be responsible. Unless specifically stated to the contrary in any written consent to an assignment, no assignment shall operate to release or discharge the assignor from any duty or responsibility under this Agreement.

8.3 **ENTIRE AGREEMENT**: The Contract Documents constitute the entire agreement among the parties pertaining to the Work and supersede all prior and contemporaneous agreements, statements and understandings of the parties in connection therewith.

8.4 **ROYALTIES AND PATENTS**: The Contract Sum includes all royalties and costs arising from patents, trademarks, and copyrights in any way involved in the Work. Whenever the Contractor is required or desires to use any design, device, material or process covered by letters of patent or copyright, the Contractor shall indemnify and save harmless the Owner and Owner's Representative, their officers, agents and employees from any and all claims for infringement by reason of the use of any such patented design, device, tool, material, equipment, or process to be performed under the Contract, and shall indemnify the Owner and the Owner's Representative, their officers, agents, authorized representatives, and employees for any costs, expenses and damages which may be incurred by reason of any such infringement at any time during the prosecution and after the completion of the Work.

8.5 **CLAIMS FOR DAMAGES OR OTHER RELIEF**: If the Contractor wishes to make a claim, whether for extra compensation, damages or other relief, by reason of any act or omission of the Owner or its agents or representative or other causes beyond the reasonable control of the Contractor, the Contractor shall comply with the requirements set forth below. Strict compliance with all claims submission requirements set forth below or in any other provision of the Contract Documents shall be a condition precedent to the Contractor's right to pursue any claim or to recover or prevail thereon. All time requirements set forth as claims submission requirements shall be deemed to be of the essence. Compliance with all claims submission requirements shall not, however, create any presumption of validity of any claim.

A. The Contractor must at the time of the discovery of the occurrence of the event giving rise to the claim and before beginning any work on which the claim is based deliver to the Owner's Representative, to the Purchasing Agent, and to the Owner's Project Manager a written statement identifying itself as a Notice of claim, stating the circumstances of the occurrence, specifying the additional work contemplated as being required, state why such work is not

already included within the scope of the Contract Documents, and to the extent reasonably foreseeable estimate the anticipated amount of the claim..

B. If the Owner within five (5) Working Days following receipt of such Notice of claim does not direct the Contractor otherwise, the Contractor shall proceed with the work which is the subject of the claim and within ten (10) calendar days after completion of the work for which additional compensation is claimed shall submit in writing to the Owner's Representative, to the Owner's Project Manager, and to the Purchasing Agent a written itemization of the actual additional compensation claimed, with all supporting documentation.

C. The Purchasing Agent or his designee shall make a determination within ninety (90) days after receipt of the submission described in Subparagraph B above, which decision shall be the final determination of the Owner. Failure by the Purchasing Agent to issue a final decision shall be deemed a final decision to deny the claim as of the ninetieth (90th) day. A final decision by the Owner shall be a condition precedent to institution by the Contractor of any judicial claim for relief on the claim. The Contractor's right to seek judicial appeal of denial of a claim is barred if no suit is filed within six (6) months following the Owner's final decision. No consideration by the Owner of any additional submissions by the Contractor in support of any claim shall extend this six month limitation.

D. The Contractor shall comply with all directions and decisions of the Owner's Representative, the Owner's Project Manager, or the Purchasing Agent and shall proceed diligently with the performance of the Contract and with any disputed work pending final resolution of any claim or dispute. "Final resolution" shall include the exhaustion of all judicial proceedings.

E. No claim whatsoever shall be made by the Contractor against any officer, authorized representative or employee of the Owner or Owner's Representative for, or on account of, anything done or omitted to be done in connection with this Contract.

F. Failure of the Owner at any time to require compliance with any term or condition of the Contract Documents or of any claims submissions requirements shall not be deemed a waiver of such term, condition, or requirement, or a waiver of the subsequent enforcement thereof.

G. In the event the Contractor makes a claim for additional compensation other than for damages related to delay which results in litigation, if the Owner substantially prevails in such litigation the Contractor shall indemnify and hold the Owner harmless from any and all reasonable attorneys' fees, litigation costs of all types, and expert witness fees and costs, arising from or related to such claim and litigation. Any claim for delay damages shall be subject to the provisions of Va. Code. Ann. § 2.2-4335.

H. If additional compensation is granted as to any claim, either by consent of the Owner or by judicial decision, the Contractor shall not be entitled to recover any interest on any amounts claimed to be due from the Owner which are the subject of a good faith dispute by the Owner which are paid within thirty (30) days following final resolution of such dispute. Interest shall accrue on any claim not paid within such thirty (30) days at the legal rate of six percent (6%) per annum simple interest commencing on the date of such final resolution.

I. No claims provision in this Agreement waives the Owner's sovereign immunity or waives the ability of the Owner to invoke sovereign immunity where sovereign immunity may be applicable.

8.6 **IMMIGRATION REFORM AND CONTROL ACT OF 1986**: The Contractor certifies that it does not and will not during the performance of the Contract employ illegal alien workers or otherwise violate the provisions of the Federal Immigration Reform and Control Act of 1986.

8.7 **ASSURANCES OF COMPLIANCE**: The Contractor shall comply with Section 504 of the Rehabilitation Act of 1973, as amended and Title VI of the Civil Rights Act.

8.8 **CONFLICT WITH PROVISIONS OF THE CODE OF VIRGINIA**: In the event that there is a conflict between the language of this Agreement and that of the Code of Virginia, and specifically Chapter 43, Title 2.2, ("Virginia Public Procurement Act"), the Code of Virginia shall control.

8.9. **SMALL, MINORITY, WOMEN OWNED AND SERVICE-DISABLED VETERANS BUSINESS ENTERPRISES AND EMPLOYMENT SERVICES ORGANIZATIONS:**

The Arlington County Human Rights Ordinance, the Virginia Public Procurement Act, and relevant Federal and State Laws, orders and regulations, require Arlington Public Schools to ensure that its procurement practices are non-discriminatory and promote equality of opportunity for Small and Minority Business Enterprises.

A. In seeking subcontractors, suppliers and vendors necessary to perform the Work, the Contractor shall encourage the participation of small businesses, women-owned businesses, minority-owned businesses, and service-disabled veteran-owned businesses and employment services organizations. At a minimum, for any portion of the Work the Contractor is not going to perform with its own forces, the Contractor shall contact the Commonwealth of Virginia Department of Minority Business Enterprise to obtain a list of certified businesses in these categories available to perform such work or provide such materials or equipment. The Contractor shall directly solicit bids from at least one certified business in each category to perform such work or provide such materials or equipment, but shall not be obligated to give any preference to any such business in the award of subcontracts or materials/equipment supply subcontracts. Identification and direct solicitation of other such businesses by other means is strongly encouraged.

B. As used in this section:

1. "Employment Service Organization" means an organization that provides community-based employment services to individuals with disabilities that is an approved Commission on Accreditation of Rehabilitation Facilities (CARF) accredited vendor of the Department for Aging and Rehabilitative Services.

2. "Minority individual" means an individual who is a citizen of the United States or a legal resident alien and who satisfies one or more of the following definitions:

a. "African American" means a person having origins in any of the original peoples of Africa and who is regarded as such b the community of which this person claims to be a part.

b. "Asian American" means a person having origins in any of the original peoples of the far East, Southeast Asia, the Indian subcontinent, or the Pacific Islands, including but not limited to Japan, China, Vietnam, Samoa,

Laos, Cambodia, Taiwan, Northern Mariana Islands, the Philippines, a U.S. territory of the Pacific, India, Pakistan, Bangladesh or Sri Lanka and who is regarded as such by the community of which this person claims to be a part.

c. "Hispanic American" means a person having origins in any of the Spanish-speaking peoples of Mexico, South or Central America, or the Caribbean Islands or other Spanish or Portuguese cultures and who is regarded as such by the community of which this person claims to be a part.

d. "Native American" means a person having origins in any of the original peoples of North America and who is regarded as such by the community of which this person claims to be a part or who is recognized by a tribal organization.

3. "Minority-owned business" means a business that is at least 51 percent owned by one or more minority individuals who are United States citizens or legal resident aliens, or in the case of a corporation, partnership, or limited liability company or other entity, at least 51 percent of the equity ownership interest in the corporation, partnership, or limited liability company or other entity is owned by one or more minority individuals who are United States citizens or legal resident aliens, and both the management and daily business operations are controlled by one or more minority individuals.

4. "Service disabled veteran" means a veteran who (i) served on active duty in the United States military ground, naval or air service, (ii) was discharged or released under conditions other than dishonorable, and (iii) has a service-connected disability rating fixed by the United States Department of Veterans Affairs.

5. "Service disabled veteran-owned business" means a business that is at least 51 percent owned by one or more service disabled veterans or, in the case of a corporation, partnership, or limited liability company or other entity, at least 51 percent of the equity ownership interest in the corporation, partnership, or limited liability company or other entity is owned by one or more individuals who are service disabled veterans and both the management and daily business operations are controlled by one or more individuals who are service disabled veterans.

6. "Small business" means a business, independently owned and controlled by one or more individuals who are United States citizens or legal resident aliens, and together with affiliates has 250 or fewer employees, or annual gross receipts of $10,000,000 or less averaged over the previous three years. One or more of the individual owners shall control both the management and daily business operations of the small business.

7. "Women-owned business" means a business that is at least 51 percent owned by one or more women who are United States citizens or legal resident aliens, or in the case of a corporation, partnership, or limited liability company or other entity, at least 51 percent of the equity ownership interest in the corporation, partnership, or limited liability company or other entity is owned by one or more women who are United States citizens or legal resident aliens, and both the management and daily business operations are controlled by one or more women.

8.11. LABOR UNIONS AND RIGHT TO WORK:

B. The Contractor is neither required nor prohibited from entering into or adhering to agreements with one or more labor organizations, or otherwise discriminating against Subcontractors for becoming or refusing to become, or remaining signatories to or otherwise adhering to, agreements with one or more labor organizations.

C. Notwithstanding the foregoing, this Contract and all other contracts and Subcontracts are subject to the provisions of Articles 1 and 3 of Chapter 4, Title 40.1, Code of Virginia, relating to labor unions and the right to work. The Contractor and its Subcontractors, whether residents or nonresidents of the Commonwealth, who perform any Work related to the Project shall comply with all of the said provisions.

PART 9 CHANGES IN THE WORK

9.1 MINOR CHANGES:

A. The Owner reserves the right to make such additions, deletions, or changes to the Work as may be necessary in its sole and absolute discretion to complete the Work; provided, however, that no such additions, deletions or changes shall materially affect the substance of the Work or the cost or time for performance thereof. This Contract shall in no way be invalidated by any such additions, deletions or changes. If the Contractor deems any such change to be not within the reasonably foreseeable scope of the Project and a material change to the scope of the Project for which the Contractor is entitled to additional compensation or any extension to the Contract Period, such claim shall be subject to the claims submittal procedures set forth in the Contract Documents and the Owner's written direction for such addition, deletion or change shall be deemed to be the occurrence.

B. Construction conditions may require minor changes in the location and installation of the Work and equipment to be furnished and other Work to be performed hereunder. The Contractor, when ordered by the Owner's Representative, shall make such adjustments and changes in the locations and Work as may be necessary without additional cost to the Owner, provided such adjustments and changes do not materially alter the character and quantity of the Work as a whole, and provided further that Drawings and Specifications showing such adjustments and changes are given to the Contractor by the Owner within fourteen (14) days. The Owner's Representative shall act as an advisor to the Owner in what constitutes a minor change for which no additional compensation shall be allowed. If the Contractor deems any such change to entitle it to additional compensation or any extension to the Contract Period, such claim shall be subject to the claims submittal procedures set forth in the Contract Documents and the Owner's Representative's written direction for such minor change shall be deemed to be the occurrence.

C. The Contractor may be entitled to an extension of time for such minor changes only for the number of days which the Owner's Representative may determine to be necessary to complete such changes and only to the extent that such changes actually affect the critical path and delay the completion of the Project, and then only if the Contractor shall have strictly complied with all the claims submittal requirements of the Contract Documents.

9.2 **EXTRA WORK:**

A. The Owner may, in its sole and absolute discretion, at any time by a Work Order or Change Order, and without notice to the Sureties, require the performance of such extra work as it deems necessary or desirable. Procedures and authorization for extra work shall be subject to the provisions set forth in Section 01 2600 of the Specifications or as otherwise provided by the Contract Documents.

B. The Contractor shall not be entitled to any additional compensation or to any increase in the Contract Period, as defined in 10.3, for any extra work performed by the Contractor without a valid Work Order or Change Order, and the Owner may order the removal or alteration at the Contractor's expense of any extra work performed without a validly issued Work Order or Change Order. Notwithstanding the foregoing, in the event of an emergency situation as a result of which the Contractor is required to proceed with mitigating or corrective action before giving Notice to the Owner to prevent or mitigate damage to person or property, the Contractor shall do so. In such event, the onset of the emergency shall be deemed the date of the occurrence and any claim for additional compensation or for an extension of the Contract Period shall be submitted in compliance with the claims procedures set forth in the Contract Documents.

C. A Change Order covering extra work shall be valid only if issued by Notice by the Owner and/or the Owner’s Representative prior to initiation of such work. When signed by the Contractor, Contractor acknowledges and accepts the terms and conditions of the Change Order as full and final agreement as to all claims for compensation or time for the work described.

D. A Work Order shall be valid only if issued by Notice by the Owner and/or the Owner’s Representative prior to the initiation of the work described therein. A Work Order directs changes in the work and will state the basis for adjustment, if any, in the Contract Sum, or Contract Time, or both. A Work Order shall be used in the absence of total agreement on the terms of a Change Order or when, in the Opinion of the Owner, the time needed to process a Change Order would adversely affect progress on the job. Upon receipt of a Work Order the Contractor shall promptly proceed with the change in the Work involved and advise the Owner’s Representative of the Contractor’s agreement or disagreement with the method, if any, provided in the Work Order for determining the proposed adjustment in the Contract Sum or Contract Time. If the Contractor does not give Notice to the Owner of any disagreement with the method provided in the Work Order for determining the proposed adjustment in the Contract Sum or Contract Time within five (5) Days following issuance of the Work Order, the Contractor shall be deemed conclusively to have agreed with the terms of the Work Order. Such Notice, if given, shall include the Contractor’s proposed alternative method and the justification therefor. Even if the Contractor disagrees with the terms of the Work Order, the Contractor must proceed with the changes as directed.

E. The amount of compensation to be paid to the Contractor for any extra work so ordered shall be determined in accordance with Sections 01 2600 of the Specifications. No additional compensation shall be paid to the Contractor until a Change Order specifying the change in the scope of Work, the increase in the Contract Sum, and any impact on the Contract Period has been signed by both the Contractor and the Owner, and a purchase order for the agreed additional compensation has been issued by Owner. If there is no agreement on these terms,

the Owner may in its sole discretion issue a Unilateral Change Order approving any change in scope of Work, Contract Sum and/or Contract Period to which it agrees and issue a purchase order for such approved amount.

F. Regardless of the manner in which the adjustment to the Contract Sum on account of extra work is determined, such adjustment shall be deemed to include all known amounts, as outlined in 01 2600. The adjustment in the Contract Sum, if any, shall constitute full and mutual accord and satisfaction for all costs related to such change.

G. Records of extra work performed hereunder, if any, shall be submitted to the Owner's Representative, within 24 hours of the work being complete. Advanced notification must be provided to the Owner and/or Owner's Representative prior to the initiation of the work described therein. Strict compliance with these requirements shall be a condition precedent to compensation for such work, but strict compliance shall not of itself establish any entitlement to additional compensation or extension of time. Duplicate copies of accepted records shall be made and signed by both Contractor or its representative and the Owner's Representative, and one copy retained by each.

H. The Contractor may be entitled to an extension of time for extra work duly authorized by the Owner or Owner's Representative as defined in Part 10.3 below and Section 01 2600.

9.3. HAZARDOUS MATERIALS:

A. "Hazardous Materials" shall mean any substance or material defined as or included in the definition of "hazardous substances," "hazardous wastes, "hazardous materials," "toxic substances," "toxic pollutants" or words of similar import under any federal law or law of the Commonwealth of Virginia, or are regulated or prohibited under any federal law or law of the Commonwealth of Virginia pertaining to protection of human health, the environment, or natural resources.

B. Contractor shall not, nor shall it permit others, to bring any Hazardous Materials onto the Project Site, unless such Hazardous Materials are specified by the Contract Documents as required to perform the Work. In the event any Hazardous Materials are brought onto the Project Site in violation of this provision, Contractor shall be solely responsible for all costs associated with responding to governmental action, removal, investigation, cleanup, or other remedial action required by applicable governmental authorities.

C. If the Contract Documents identify pre-existing Hazardous Materials on the Project Site, Contractor shall comply strictly with all directions given by the Contract Documents in dealing with such Hazardous Materials. In the event Hazardous Materials are released due to failure of Contractor to comply with the directions given by the Contract Documents, or due to negligent or reckless conduct for which Contractor is responsible, Contractor shall be solely responsible for all costs associated with responding to governmental action, removal, investigation, cleanup, or other remedial action required by applicable governmental authorities.

D. If the Contractor encounters Hazardous Materials not disclosed by the Contract Documents, the Contractor shall immediately cease Work in the affected area, seal the affected area off to the extent conditions allow, and Notify the Owner's Representatives, the Owner's Project Manager, and the Purchasing Agent. Owner shall be responsible for any remedial action

required to address the condition. Contractor shall continue performance on Work not requiring remedial action by Owner. Any claim by Contractor for the unexpected presence of Hazardous Materials shall be subject to the claims submission procedures of the Contract Documents, with the date of discovery of the Hazardous Materials being the date of the occurrence.

9.4 **OMITTED OR DELETED WORK:**

A. The Owner may at any time by a written order and without notice to any Surety require the omission or deletion of such Work as the Owner may find necessary or desirable in its sole and absolute discretion.

B. An order for omission or deletion of Work shall be valid only if issued by Notice by the Owner and/or the Owner's Representative. In such event the Work so ordered must be omitted by the Contractor. The amount by which the Contract Sum shall be reduced shall be determined in accordance with Section 01 2600 of the Specifications.

C. Contractor shall not be entitled to any extension of the Contract Period as a direct or indirect result of any omission or deletion of Work by Owner except to the extent Contractor can establish that, despite prompt, reasonable and diligent efforts to do so, it was not able to modify the Project Schedule in a manner which would avoid delay to the critical path resulting solely from such omission or deletion of Work by Owner. All claims for any such delay shall be governed by the claims procedures set forth in the Contract Documents.

9.5 **AUDIT:**

A. The Owner and its authorized representatives shall have access to all records necessary to perform a complete audit of the Contractor for the purposes of verifying that the certified cost or pricing data submitted were accurate, complete and current. The Owner shall, until the expiration of three years from the date of final payment under this Contract, have the right to examine and copy those books, records, documents, papers and other supporting data which involve transactions related to this Contract or which permit adequate evaluation of the cost or pricing data submitted, along with the computations and projections used therein (the "Records"), and the Contractor hereby covenants to maintain the Records in good order for such time and to deliver promptly the Records to the Owner upon request.

B. The Contractor agrees to include in all subcontracts under this contract a provision to the effect that the Owner and its authorized representatives will, until three years from the date of final payment under the subcontract, have access to and the right to examine and copy those books, records, documents, papers and other supporting data which involve transactions related to the subcontract.

9.6 **DISPUTED WORK:**

A. If the Contractor is of the opinion that any work required, necessitated, or ordered by the Owner's Representative or the Owner, or any action required or ordered by the Owner's Representative or the Owner to be taken or not taken is not Work included within the Contract Sum, any claim for additional compensation or an extension of the Contract Period arising therefrom shall be subject to the claims procedures and submission requirements set forth in the Contract Documents.

B. No payment shall be made to Contractor for any disputed work for which Owner's final determination is that Contractor is not entitled to receive any increase in the Contract Sum for such Work. Payment for Work not in dispute shall continue to be made to the Contractor in accordance with the Contract Documents.

PART 10 TIME

10.1 TIME OF START AND COMPLETION:

A. The Contractor shall commence Work within ten (10) days after receipt of the Notice to Proceed. Time being of the essence with respect to this Contract, the Contractor shall prosecute the Work diligently, using such means and methods of construction as will secure its full completion in accordance with the requirements of the Contract Documents, and will complete the work within the Contract Period. The Contractor shall provide a Project Schedule as prescribed in Section 01 3200 of the Specifications. By submitting a Bid, the Contractor confirms that the Contract Period is a reasonable period for performing the Work. The Contractor shall proceed expeditiously with adequate forces, scheduling and resources to complete the Work within the Contract Period.

B. The Owner and the Contractor hereby acknowledge and agree that time is of the essence with respect to this Contract and that in the event the Contractor fails to complete the Work within the Contract Period, the Owner and the Contractor agree to liquidated damages for late completion as set forth in the Contract. The Contractor and its Surety hereby agree that the stated sum per day for each such day of delay shall be deducted and retained out of the moneys which may become due hereunder and if not so deductible, the Contractor and its Surety shall promptly make payment to Owner of the amount due upon receipt of demand therefore.

10.2 **CONSTRUCTION MOBILIZATION**: The Contractor's mobilization to perform the Contract Work shall commence at the issuance of a written Notice to Proceed and shall be completed within thirty (30) days of the date of the Notice to Proceed. At a minimum, the construction mobilization phase shall include the following:

A. Submission of an acceptable detailed Schedule of Values immediately after Notice to Proceed and prior to the submission of the first request for payment, as required by Part 11.2 of this Section;

B. Submission of an acceptable Startup Construction Schedule within seven (7) days of Notice to Proceed as required by Section 01 3200 of the Specifications.

C. Submission of Contractor/Subcontractor Certification of Criminal Conviction forms, due within ten (10) days of Notice to Proceed;

D. Submission of a proposed List of Sub-contractors within ten (10) days of Notice to Proceed as required by Part 6 of these General Conditions;

E. Submission of an acceptable Contractor Quality Control Plan within ten (10) days of Notice to Proceed as required by Section 01 4000 of the Specifications;

F. Submission of an acceptable Project Schedule as required by Section 01 3200 of the Specifications;

G. Submission of an acceptable Submittal Schedule as required by Submittals, Section 01 3300 of the Specifications; and

H. Submission of an acceptable Waste Management Plan as required by Section 01 7419 of the Specifications.

10.3 **EXTENSION OF TIME:**

A. The parties agree that no extension beyond any required date of completion, whether Substantial Completion or Final Completion, fixed by the terms of the Contract shall be effective unless granted in writing, and signed by the Owner's Purchasing Agent or his designee. All time requirements set forth herein shall be of the essence. It shall be a condition precedent to any claim for extension of time that the Contractor comply strictly with the following requirements:

1. Give Notice of delay in writing to the Owner's Representative, to the Owner's Project Manager, and to the Purchasing Agent within two (2) days of the occurrence which gives rise to the alleged delay, or within seven (7) days of the beginning of the delay if the resulting delay was not reasonably foreseeable at its commencement. Delays based on weather occurrences shall be submitted in accordance with, and are subject to the limitations of, Part 10.7, Weather Delays, of these General Conditions. The Notice of claim for delay shall identify itself as a notice of claim, shall state the circumstances of the occurrence, shall state the justification for the delay and for the extension of time, and shall state the estimated duration of the delay and of the extension requested. In case of a continuing cause of delay, only one Notice shall be required so long as the delay asserted is continuous, but an additional Notice shall be given at least every fourteen (14) days providing a statement of what the Contractor has done to mitigate or overcome the cause of the delay, how long the delay is anticipated to continue, and the justification for such projection. Strict compliance with all of these submission requirements shall be a condition precedent to consideration of any claim for delay related to weather, but compliance of itself shall not establish the validity of any claim.

2. The Contractor shall submit to the Owner's Representative, to the Project Manager, and to the Purchasing Agent a statement of the actual time extension requested as a result of the claimed delay, which shall include all documentation and supporting information for such claimed delay required by this article and by any applicable Contract Specifications, within twenty-one (21) days after the delay has ceased.

3. The Contractor shall comply with all directions and decisions of the Owner's Representative, the Owner's Project Manager, or the Purchasing Agent and shall proceed diligently with the performance of the Contract and with any disputed work pending final resolution of any claim or dispute. "Final resolution" shall include the exhaustion of all judicial proceedings.

4. The Contractor shall make no claim against any officer, agent or employee of Arlington Public Schools for, or on account of, any act or omission to act in

connection with the Contract, and to the extent permitted by applicable law acknowledges and agrees that any and all rights to make any such claim are waived without condition or limitation.

5. Strict compliance with all applicable submittal requirements shall be a condition precedent to entitlement to any extension of time, but such compliance shall not of itself establish entitlement. Failure to comply with the foregoing submittal requirements shall be deemed a conclusive waiver, without limitation, of any claim for extension of time arising from or related to the alleged occurrence.

B. The Contractor shall not be entitled to any extension of time for delay in completion of the Work unless such delay is caused solely by any act or delay caused by the Owner, or by riot, insurrection, war, pestilence, acts of public authorities, fire, earthquakes, or by strikes, or other causes, which in the opinion of the Owner, are entirely beyond the expectation and control of the Contractor. The Contractor shall be entitled to an extension of time for such causes only for the number of days of delay which the Owner's Representative may determine to be due solely to such causes and only to the extent that such occurrences actually delay achieving the applicable completion date, and then only if the Contractor shall have strictly complied with all applicable claims submission requirements of this Contract, including, without limitation, Paragraph 10.1. To the extent any delay for which the Contractor seeks an extension of time is due concurrently to causes for which Contractor may be entitled to a delay and to causes within the reasonable control or foreseeability of the Contractor, the Contractor shall not be entitled to any extension of time.

C. The Contractor is to assume five (5) Days delay from the date of Notice to Proceed to the date of Project Substantial Completion. These five (5) Days shall be known as "Owner Float," and may be applied to any delay from any cause, at the Owner's sole discretion, including but not limited to Owner caused delay. The Contractor shall include this Owner Float in the Contract Period, in the Contract Sum, and shall incorporate the Owner Float in the Project Schedule. The Contractor will not be compensated, neither monetarily nor by time extension, for any delay to which the Owner elects to apply any portion of the Owner Float so long as the Owner Float has not been exhausted.

D. The Owner's Purchasing Agent or his designee shall issue the Owner's final decision on any claim for delay within ninety (90) Days following receipt of the Contractor's final submission in support of the claim, if submitted timely. Failure of the Purchasing Agent to issue a written decision shall be deemed a final decision to deny the claim as of the ninetieth (90) Day. A final decision by the Owner shall be a condition precedent to institution by the Contractor of any judicial proceeding for relief on the claim. The Contractor's right to seek a judicial appeal of denial of a claim for extension of time is barred if no suit is filed within six (6) months following the Owner's final decision on the claim. No consideration by the Owner of any additional submissions by the Contractor in support of any claim shall extend this six month period.

E. Delays caused by the failure of the Contractor's Subcontractors, suppliers and dealers to furnish approved working drawings, shop drawings, submittals, materials, fixtures, equipment, appliances, or other fittings on time or the failure of Subcontractors or Sub-Subcontractors to perform their work in conformity with the Project Schedule or other requirements of the Contract Documents shall not constitute a basis for extension of time.

F. The Contractor making a claim against the Owner for costs or damages due to unreasonable delays caused by the Owner, and its agents or employees, shall be liable to the Owner for a percentage of all the costs the Owner incurs in investigating, analyzing, negotiating, and litigating the claim, which percentage shall be equal to the percentage of the Contractor's total delay claim which is determined through litigation to be incorrect or to have no basis in law.

G. No claims provision in this Agreement waives the Owner's sovereign immunity or waives the ability of the Owner to invoke sovereign immunity where sovereign immunity may be applicable.

H. The Contractor shall comply with all directions and decisions of the Owner's Representative, the Owner's Project Manager, or the Purchasing Agent and shall proceed diligently with the performance of the Contract and with any disputed work pending final resolution of any claim or dispute. "Final resolution" shall include the exhaustion of all judicial proceedings.

10.4 **RECOVERY SCHEDULE:**

A. Should the approved Project Schedule show at any time during Contractor's performance, in the sole opinion of the Owner, that the Contractor is 14 days or more behind schedule for any specific critical path milestone date, or should the Contractor be required to undertake actions under Paragraph 10.7 of this section, the Contractor shall submit a Recovery Schedule to the Owner within five (5) days after receiving a written request from the Owner. The Recovery Schedule shall explain and display how the Contractor intends to reschedule its Work at no additional cost to the Owner, in order to regain compliance with the Project Schedule during the immediate subsequent pay period.

B. If the Contractor believes that all of the time can be recovered during the subsequent pay period, the Contractor will be permitted to prepare a Recovery Schedule as set forth below. However, if the Contractor believes it will take more than thirty (30) days to recover all of the lost time, it shall prepare and submit a request for revision of the Project Schedule and comply with all of the requirements for a Schedule Revision.

1. The Contractor shall prepare and submit to the Owner a one-month maximum duration Recovery Schedule, incorporating best available information from Subcontractors and others which will permit return to the approved Project Schedule at the earliest possible time. The Contractor shall prepare a Recovery Schedule to the same level of detail as the Project Schedule for a maximum duration of one month. This Recovery Schedule shall be prepared in coordination with other separate Contractors on the Project.

2. Within two (2) days after submission of Recovery Schedule to the Owner, the Contractor shall participate in a conference with the Owner to review and evaluate the Recovery Schedule. Within two (2) days of that conference, the Contractor shall submit the revisions necessitated by the review for the Owner's review and approval. The Contractor shall use the approved Recovery Schedule as his plan for returning to the Project Schedule.

3. Contractor shall confer continuously with the Owner to assess the effectiveness of the Recovery Schedule. As a result of these conferences, the Owner will direct the

Contractor as follows: (i) If the Owner determines the Contractor is still behind schedule, the Owner will direct the Contractor to prepare a revised Recovery Schedule and comply with all of the requirements of a Schedule Revision as stated herein and the other requirements of the Contract Documents; provided, however, that nothing herein shall limit in any way the rights and remedies of the Owner as provided elsewhere in the Contract Documents. (ii) If the Owner determines the Contractor has successfully complied with provisions of the Recovery Schedule, the Owner will direct the Contractor to return to the use of the approved Project Schedule.

10.5 **PHASING MILESTONES**: Substantial Completion and Final Completion Dates for each Phase must be accomplished in an orderly and timely manner in order to complete the Project on time and not delay or hinder the Owner's occupancy of the completed Project. The Substantial Completion and Final Completion Dates are set forth the Contract. These dates shall be binding upon the Contractor, subject to the provision of the Contract Documents allowing for agreed upon extensions of the Contract Period. The Contractor shall include each of these dates in its Project Schedule in accordance with scheduling standards set forth in Specification Section 01 3200.

10.6 **CONTRACTOR DELAYS**: The Contractor agrees that wherever it becomes apparent from review of the current monthly Project Schedule Update that delays to the critical path have resulted and, hence, that any Substantial Completion Date or Final Completion Date established by the Contract will not be met, or when so directed by the Owner, the Contractor shall take some or all of the following actions at no additional cost to the Owner:

A. Increase construction manpower in such quantities and crafts as will substantially eliminate the backlog of Work;

B. Increase the number of working hours per shift; shifts per working day, or days per week; the amount of construction equipment; the forms for concrete work or other trade specific materials or equipment; or any combination of the foregoing to substantially eliminate the backlog of Work;

C. Reschedule activities to achieve maximum practical concurrency of accomplishment of activities, and comply with those revisions;

D. The Contractor shall submit to the Owner’s Representative for review, a written statement of the steps the Contractor intends to take to remove or arrest the delay to the Project Schedule. If the Contractor shall fail to submit a written statement of the steps it intends to take or should fail to take such steps as required by the Contract, the Owner or the Owner’s Representative may direct the level-of-effort in manpower (trades), equipment, and work schedule (overtime, weekend and Holiday work, etc.) to be employed by the Contractor in order to remove or arrest the delay to the critical path in the accepted Project Schedule, and the Contractor shall promptly provide such level-of-effort at no additional cost to the Owner. In addition, should schedule delays persist, the Contractor’s Surety will be asked to attend meetings to update the Project Schedule.

E. Should it be deemed necessary, in the Owner’s sole discretion, that delays or incomplete work have warranted the use of outside sources to arrest a delay or to complete incomplete work, the Owner reserves the right to back-charge the Contractor for all costs incurred by the Owner in the use of outside sources.

10.7 **WEATHER DELAYS**: Unusually severe weather conditions which prevent or inhibit the Contractor's performance of the Work are referred to in this Part 10.7 as "Inclement Weather" and are more specifically defined below. The Contract Period may be adjusted to account for Inclement Weather, but only if (i) there has been strict compliance by Contractor with all claims submission requirements and other requirements of the Contract Documents related to time extensions; (ii) the delay asserted is shown by the Contractor to be the sole cause of lengthening the longest critical path indicated on the Project Schedule in effect during the period of such alleged delay, and (iii) the following definition of "Inclement Weather" is satisfied:

A. Inclement Weather is defined as the occurrence of one or more of the following conditions within a twenty-four (24) hour period that prevents Work shown on the Construction Schedule as planned for performance at that time which is directly affected by such weather conditions or by impact on access to the Site:

1. Precipitation (rain, snow, or ice) in excess of one-tenth inch (0.10") liquid measure.

2. Temperatures that do not rise above that required for the Day's planned Work, if such temperature requirement is specified or accepted as standard industry practice.

3. Sustained wind in excess of twenty-five (25) m.p.h.

B. Inclement Weather may include, if appropriate, "dry-out" or "mud" days:

1. Resulting from precipitation Days that occur beyond the Monthly Assumed Inclement Weather Days;

2. Only if there is a hindrance to planned Work and the Contractor has taken all reasonable accommodations to avoid such hindrance; and,

3. At a rate no greater than one (1) Day for each Day that has precipitation in the amount of 1.0 inch or more, liquid measure, but if there is precipitation on consecutive Days which totals 1.0 inch or more, liquid measure, only one (1) Day may be included for those consecutive Days.

C. Monthly Assumed Inclement Weather Days also are herein referred to as the Standard Baseline. The Standard Baseline for purposes of factoring the Monthly Assumed Inclement Weather Days into the Project Schedule is four calendar days per month. Standard Baseline Inclement Weather is included in the Work, is to be included in the Project Schedule, and shall not form any basis for an extension of Contract Time. The Standard Baseline is not cumulative. Any portion of the Standard Baseline not applied to an Inclement Weather delay approved by APS in any month shall not be carried forward to any subsequent month.

D. In accordance with Paragraph 10.3 above, as a condition precedent to consideration of or entitlement to any Inclement Weather time extension, the Contractor shall:

1. Notify the Owner's Representative, the Owner's Project Manager, and the Purchasing Agent in writing of the occurrence of Inclement Weather within forty-eight hours after the onset of such Inclement Weather. Such notice shall identify itself as a notice of claim for Inclement Weather delay, shall describe in reasonable

detail the type of Inclement Weather encountered by the Contractor and the activities on the longest critical path on the Project Schedule thereby interfered with or interrupted, and shall estimate the duration of the delay and of the extension requested.

2. Submit to the Owner's Representative a statement of the actual time extension requested in strict compliance with Paragraph 10.3.A(2) above.

3. For purposes of any claim for delay based on Inclement Weather, each Inclement Weather Day claimed shall constitute a separate occurrence and the Contractor shall comply with the foregoing claim submittal requirements for each Day of Inclement Weather claimed.

4. Compliance with the foregoing conditions precedent shall not of itself establish entitlement to a time extension for Inclement Weather but failure to comply shall be a bar to any such time extension.

E. If the basis for an extension of time for Inclement Weather is established in accordance with all claim submittal requirements, an extension of time on the basis of Inclement Weather may be granted only for the number of Inclement Weather Delay Days in excess of the Standard Baseline for the month of the occurrence.

1. Any request for an extension of time on the basis of Inclement Weather MUST prove impact to activities on the longest critical path of the Project Schedule in effect at the time of the occurrence.

2. Inclement Weather may support a time extension only if Inclement Weather prevents planned Work for fifty percent (50%) or more of the Contractor's scheduled work Day, longest critical path construction activities were included in the Day's schedule, and performance of that Work was directly impacted by the Inclement Weather.

3. Should the Contractor be granted an extension of time on the basis of Inclement Weather, the Owner may or may not elect to use any of the Owner Float described in Paragraph 10.3 in lieu of granting a time extension.

PART 11 PAYMENTS AND COMPLETION

11.1 PRICES:

A. For the Contractor's complete performance of the Work, the Owner agrees to pay, and the Contractor agrees to accept, subject to the terms and conditions hereof, the Contract Sum, plus the amount required to be paid for Extra Work approved under Paragraph 9.2 hereof, less credit for any work omitted pursuant to Paragraph 9.3 hereof, and any other credits or offsets, including reimbursements or liquidated damages to which the Owner is entitled.

B. The amount awarded as a unit price for any unit price Contract item shall represent payment in full, including overhead and profit, for all material, equipment and labor necessary to complete, in conformity with the Contract Documents, each unit or item of work shown, specified, or required under the said unit price Contract item.

C. No payment other than the amount awarded will be made for any class of Work included in a lump sum Contract item or a unit price Contract item, unless specific provision is made therefore in the Contract Documents.

11.2 **SUBMISSION OF SCHEDULE OF VALUES**: Contractor shall organize and provide detail on the Schedule of Values in a manner acceptable to the Owner and as set forth in Section 01 2900 of the Specifications. The Schedule of Values, once accepted by the Owner's Representative, may be used for verifying the Contractor's applications for partial payments hereunder but shall not be binding upon the Owner for any purpose whatsoever.

11.3 **APPLICATION FOR PAYMENT:**

A. The Contractor must submit applications for payment using AIA Document G702 - Application and Certificate for Payment. Affidavits from each Subcontractor verifying receipt of payments of amounts billed in the previous payment request must accompany each application for payment. Failure to submit all affidavits will delay payment.

B. Upon the request of the Owner's Representative, as a condition precedent to payment pursuant to the terms of this Contract, the Contractor shall give the Owner a statement that no employee of the Owner has received or has been promised, directly or indirectly, any financial benefit, by way of a fee, commission, finder's fee or in any other manner, remuneration arising from or directly or indirectly related to this Contract. All parties agree that the Owner shall have the right, in its sole and absolute discretion, to withhold payment to the extent of any such fee or commission. The Contractor shall not be entitled to interest and shall not have any claim on account of any payments being withheld under this paragraph.

11.4 **PARTIAL PAYMENTS:**

A. On or about the first of each month, the Contractor shall make and certify an estimate of the amount and fair value of the Work performed and may apply for partial payment therefore. The Owner's Representative shall revise the estimate to show the value of Work completed in accordance with the Owner's Representative's observation of the Work and knowledge, information and belief. The Contractor agrees to be bound by the Owner's Representative's revisions to the applications for partial payment.

B. Whenever the monthly estimate, after approval by the Owner's Representative (Architect), shows that the value of the work completed during the previous month exceeds $1,000.00, the Owner's Representative (Architect) will certify the Contractor's Application and Certificate for Payment for such Work. Such Application and Certificate for Payment as approved by the Owner's Representative will authorize payment by the Owner in an amount equal to the value of the Work completed less any sums retained or deducted by the Owner under the terms of the Contract Documents, and less retainage of five (5) percent of payments approved.

C. An Application and Certificate for Payment shall not be considered received by the Owner unless accompanied by the following:

1. An affidavit that payrolls, bills for materials and equipment, Subcontractors invoices, and all other indebtedness in connection with amounts paid by the Owner to the Contractor under previous Application and Certificates for Payment have been paid and otherwise satisfied; and

2. All construction photos as required by Contract Specification 01 3233; and

3. A revised Project Schedule as required by Contract Specification 01 3200.

D. Within forty-five (45) days after receipt of each approved Application and Certificate for Payment, the Owner shall pay the Contractor in accordance with the applicable Certificate and the Contract Documents.

E. Unless otherwise provided herein, no payment will be made for any materials or equipment supplied hereunder before they are:

1. Incorporated in the work in a permanent manner required by the Contract Documents,

2. Properly stored at the site of the Project, or

3. Properly insured and stored in a bonded warehouse to the satisfaction of the Owner.

F. The cost of equipment and non-perishables delivered and stored only at the Project Site and tested for adequacy may be included in the Contractor's Application and Certificate for Payment; provided, however, that the Contractor shall furnish written evidence satisfactory to the Owner that the Contractor has clear title to such materials or equipment at the time of payment therefore by the Owner and that such equipment is being stored and maintained in accordance with the Contract Documents and the Drawing's recommendations. The amount to be paid by the Owner for such equipment and non-perishables will be 100 percent (100%) of the invoice cost to the Contractor as supported by receipted bills, less the specified retainage. Such payment shall not relieve the Contractor of full responsibility for completion of the Work and for protection of materials and equipment until incorporated in the Work in a permanent manner as required by the Contract Documents.

G. Before any payment will be made under this Contract, the Contractor and every Subcontractor, if required, shall deliver to the Owner’s Representative a written, verified statement, in satisfactory form, showing in detail all amounts then due and unpaid by the Contractor to all laborers, workers, and mechanics, employed under the Contract for the performance of the Work at the Project Site, for daily or weekly wages, or to other persons for materials, equipment, or for supplies delivered at the Project Site during the period covered by the payment request.

11.5 DELAYED PAYMENTS:

A. Owner may withhold payment to such an extent as may be necessary in the opinion of the Owner in consultation with the Owner's Representatives to protect the Owner due to loss because of:

1. Defective work not remedied,

2. Third party claims filed or reasonable evidence indicating probable filing of such claims,

3. Failure of the Contractor to make payments properly to Subcontractors or for labor, materials or equipment,

4. Reasonable evidence that the Work cannot be completed for the unpaid balance of the Contract Sum,

5. Damage to the Owner or another Contractor,

6. Reasonable evidence that the Work will not be completed within the time required for completion,

7. Persistent failure to carry out the Work in accordance with the Contract Documents, or

8. Liability, damage, or loss due to injury to persons or damages to the Work or property of other Contractors, subcontractors of others, caused by the act or neglect of the Contractor of any of its Subcontractors.

B. The Owner shall have the right, as an authorized representative for the Contractor and without the Surety's consent, to apply any such amounts so withheld in such manner as the Owner may deem proper to satisfy such claims or to secure such protection. The application of these amounts shall be deemed payments for the account of the Contractor and shall reduce the Owner's obligation to the Contractor accordingly. The Contractor may not stop Work as a result of any payment or portion thereof being properly withheld in accordance with this Contract. If Contractor does order Work stopped, or if the Work is stopped in whole or in part as a result thereof, the Contractor shall be wholly liable for any damages from delay, or otherwise, which may arise because of such stoppage.

11.6 SUBSTANTIAL COMPLETION:

A. **WRITTEN NOTIFICATION**: When the Contractor considers that the Work, or such portion or phase thereof which the Owner agrees in writing to accept separately, is Substantially Complete, the Contractor shall provide the Owner and the Owner's Representatives written notification of such fact accompanied by a complete list of Contract

work items remaining to be completed (Contractor's Punch List) and as set forth in Section 01 7700.

B. **PUNCH LISTS**:

1. Within fourteen (14) days following receipt of the Contractor's written notification of Substantial Completion (including a Contractor's punch list, as set forth in Paragraph 11.6.A), the Owner's Representative (Architect) shall conduct an inspection of the Work and compile a comprehensive list of deficiencies and incomplete Work (i.e. Architect's Punch List). The Owner's Representative (Architect) shall then issue a Consolidated Punch List incorporating the Contractor's and the Architect's Punch Lists into a single list in a uniform format ("Consolidated Punch List").

2. Following issuance of the Consolidated Punch List and to achieve Final Completion, unless otherwise specified in the Contract Documents. If the Work for which Final Completion is requested is not Finally Complete within the required period, it is understood and agreed by all parties that the Contractor shall become liable to the Owner for Liquidated Damages as established by the Contract, which shall continue in effect until the applicable Final Completion has been achieved.

3. If the Owner takes beneficial occupancy or commences use of any aspect of the Work prior to the date required for Substantial Completion of that portion of the Work, the Contractor shall notify the Owner in a timely manner when access to such occupied or in use space or facilities is required, obtain Owner's approval to, and coordinate access to, the spaces or facilities without disrupting the use thereof by the Owner. Until the date required for Substantial Completion of any portion of the Work occupied or used by Owner, any impact upon the Contract Period or the Contract Sum arising from such occupancy or use shall be governed by the claims submittal procedures and requirements of the Contract Documents. If the Owner takes or continues occupancy or commences or continues use of any aspect of the Work after the date required for Substantial Completion, and the Contractor requires access to the occupied or in use space or facility, prior to Final Completion, and is currently occupying and in use of any aspects of the Work, the Contractor shall notify the Owner in a timely manner, obtain Owner's approval to, and coordinate access to, the spaces or facilities without disrupting the use thereof the spaces by the Owner. Should the Contractor access to such spaces or facilities to perform complete any portion of the Work, including but not limited to Punch List item repairs, require the temporary removal of furniture or other items and furnishings put in place by the Owner, the Contractor shall its own cost and effort, protect any and all furniture or other items that will not be moved and timely remove and reinstall all Owners furnishings and furniture or other items within the affected spaces to their original location and condition. Contractor shall be responsible for any damage done to the Work in place, to the furniture or to other items in such event. If for any reasons, the Owner moves the furniture or other items and reinstalls them as noted above, all associated costs for time, material and labor shall be charged to the Contractor plus an administrative fee of 10%.

4. Except with the consent of the Owner, the Owner's Representative (Architect and Construction Manager) shall perform no more than two Substantial Completion inspections for any designated portion of the Work or for the entirety of the Work. Should more than two Substantial Completion inspections be required, the Contractor

shall pay the Owner any amounts paid to the Owner's Representative (Architect and Construction Manager) and other third-party consultants for any additional inspections.

5. Should the Contractor fail to complete or correct any item on the Consolidated Punch List within the required period, the Owner may, at any time thereafter, complete one or more items on the list with its own forces or with such other Contractors as it deems advisable and recover from the Contractor the cost for performing such work plus a markup of ten percent (10%) to cover administrative costs. This right of completion shall be in addition to, and not in lieu of, any remedy otherwise provided by the Contract Documents. Any action taken by the Owner to complete or correct any item the Contractor has failed to complete or correct as above shall have no impact on the Contractor's Warranty obligations.

C. **SUBSTANTIAL COMPLETION CERTIFICATION**: When the Contractor considers that the Work, or such portion or Phase thereof which the Owner agrees in writing to accept separately, is Substantially Complete, the Contractor shall submit to the Owner and the Owner's Representative a written request for an inspection of the Work and a Certificate of Substantial Completion. Sufficient notice shall be given to allow the Owner and Owner's Representative to schedule the inspection. Prior to requesting Owner's and Owner's Representative's inspection for Certification of Substantial Completion, the following must be completed:

1. Submit a progress payment request coincident with or following the Substantial Completion date claimed, showing one hundred (100 %) percent completion for the portion of the Work claimed as Substantially Complete.

2. Submit all outstanding changes to the Contract Sum which are not barred by the claims submission procedures of the Contract Documents.

3. Advise Owner of pending insurance changeover requirements.

4. Submit specific warranties, workmanship/maintenance bonds, maintenance agreements, final certifications, and similar documents.

5. Obtain and submit final releases of liens, which may reserve rights for Work performed after the date of the release, (include with Certificate of Substantial Completion) from all Subcontractors, construction materials suppliers, and services and utilities, enabling the Owner's full and unrestricted use of the Work and access to services and utilities, and including (where required) Occupancy Permits, facility operating certificates, and similar releases from authorities having jurisdiction.

6. Submit two (2) electronic copies and three (3) paper copies (8- 1/2" x 11" page format in 3-ring notebook binders, with a table of contents) of Project record documents, maintenance manuals, final Project photographs, damage or settlement survey, property survey, and similar final Project record information.

7. Submit certifications of compliance for each test and inspection required by all Sections of the Project Manual. The certifications shall be signed by the Contractor and by the parties conducting the test.

8. Deliver tools, spare parts, extra stocks of materials, and similar physical items to Owner.

9. Make final change-over of locks and transmit keys to Owner, and advise Owner's personnel to change over the security provisions.

10. Complete start-up testing of systems, water and air balancing, adjust and calibrate temperature control system, fire alarm system, generator (as required, if included in the design). Clean all HVAC units, ducts if necessary. Remove temporary filters and install new filters in all air-handling units and in all unit ventilators.

11. Complete all commissioning and acceptance tests.

12. Complete instruction for Owner’s operating/maintenance personnel for all equipment and machinery installed under the Contract Work as specified by the Owner.

13. Discontinue (or change over) and remove from Project Site temporary facilities and services, along with construction tools and facilities, mock-ups, and similar elements.

14. Complete Final Cleaning and Repair of the Work as specified in Specifications Division 1 Section, “Closeout Procedures”.

15. Touch up and otherwise repair and restore marred exposed finishes.

16. Warranties shall become effective, once Owner and Owner’s Representative determine that the Contractor has achieved Substantial Completion and execute the Certificate of Substantial Completion.

17. If the Owner partially occupies the Project Site, this shall not indicate acceptance of Substantial Completion or activation of warranties.

The Contractor shall provide extended warranties. Warranties beginning upon acceptance and fully executed Certificate of Substantial Completion.

D. Upon receipt of Contractor's request, the Owner and Owner’s Representative will either proceed with inspection or advise the Contractor of pre-requisites not fulfilled. Following inspection, the Owner and Owner’s Representative will either prepare the Certificate of Substantial Completion, or advise the Contractor of Work, or additional Work, which must be performed prior to issuance of the Certificate of Substantial Completion. Should the Owner and/or Owner’s Representative determine that the Work is not Substantially Complete, notification in writing will be given to the Contractor stating the reasons therefore. Contractor shall remedy the deficiencies in the Work and shall send to the Owner and Owner’s Representative (Architect) a second written notice of Substantial Completion. The Owner and Owner’s Representative will then re-inspect the work. If the Certificate of Substantial Completion is not issued following the second inspection, the provisions of General Condition 11.6.B.4 shall be applicable until the Certificate of Substantial Completion is issued.

E. When the Owner and Owner's Representative concur that the Work is Substantially Complete, the Owner's Representative shall:

1. Prepare a Certificate of Substantial Completion on AIA Form G704 accompanied by Contractor's list of items to be completed or corrected to achieve Final Completion, as verified and amended by the Owner's Representative

2. Submit the Certificate of Substantial Completion to the Owner and the Contractor for their written acceptance of the responsibilities assigned to them in the Certificate.

3. Notify the Contractor to submit Final As-Built Mylar drawings and one digital copy, which are to be labeled "FINAL AS-BUILTS" and submitted to the Owner's Representative for approval. Approval and acceptance by Owner of Final As-Builts shall be a condition precedent to Contractor requesting Final Completion approval.

11.7 FINAL COMPLETION:

A. Upon written notification by the Contractor that the Work is Finally Complete, and upon the Contractor's submission of a final Application and Certificate for Payment, the Owner's Representative will conduct a final inspection of the Work. If the Owner's Representative determines that the Work is not Finally Complete, a Final Completion Punch List will be issued to Contractor. Contractor may request a second inspection when Contractor deems the Final Completion Punch List to have been completed. If the Certificate of Final Completion is not issued following the second inspection, the provisions of General Condition 11.B.4 shall be applicable until the Certificate of Final Completion is issued. When the Owner's Representative determines that the Work has been satisfactorily completed and the Contract Documents fully performed, the Owner's Representative shall promptly prepare and issue a Final Certificate for Payment stating that to the best of the Owner's Representative's knowledge, information and belief, and on the basis of his observations and inspections, the Work has been completed in accordance with the Contract Documents is due and payable. Final Completion shall occur within thirty (30) calendar days after the Date of Substantial Completion, or as otherwise specified in the Contract Documents.

B. Except with the consent of the Owner, the Owner's Representative shall perform only Final Completion inspection for any designated portion of the Work or for the entirety of the Work. Should more than one Final Completion inspection be required, the Contractor shall pay the Owner amounts paid by the Owner to the Owner's Representative for any additional inspections necessary to achieve Final Completion.

C. The Owner shall, within thirty (30) days after receipt of the approved Final Application and Certificate for Payment, pay the Contractor the amount stated therein.

11.8 CORRECTION OF DEFECTIVE WORK BEFORE AND DURING WARRANTY PERIOD:

A. In the event the Work, or any portion thereof, is determined during the Warranty Period to be defective, incomplete or to have been improperly performed, the Contractor shall, within three days after written notice from the Owner, commence to remove all defective and deteriorated Work and materials and replace it at the Contractor's expense with Work and materials in accordance with the requirements of the Contract Documents and to complete

all incomplete Work in accordance with the Contract Documents within a reasonable time period.

B. In the event the Contractor fails to commence the removal, replacement, completion or correction of such Work within three days after the date of written notice from the Owner and to complete such Work within a reasonable time period thereafter, the Owner will cause such Work to be performed by other Contractors and the Contractor and its Surety under the Performance Bond will be obligated to pay the Owner all costs incurred in the performance of such Work plus an administrative fee of ten percent (10%) within thirty (30) days following submission by Owner to Contractor of such demand for payment.

C. The Contractor's Warranty obligations shall remain in full force and effect regardless of whether the Warranty Work was performed by the Contractor or by the Owner.

D. Defects or nonconformities which are remedied as a result of Warranty obligations shall subject the remedied portion of the Work to an extended Warranty Period of one (1) year from the date upon which such defect or nonconformity was fully remedied or from the date of Final Completion of the Project as a whole, whichever is later, whether such Warranty Work was performed by the Contractor or by the Owner. Any repetitive defect, failure or malfunction identified within the Warranty Period shall remain under Warranty until it has been fully corrected and has performed without defect, failure or malfunction for a period of one (1) year.

11.9 **EVIDENCE OF PAYMENTS, SATISFACTION OF OBLIGATION, AND INSURANCE COVERAGE**: Neither final payment nor any retainage shall become due until the Contractor submits to the Owner's Representative (i) an affidavit that payrolls, bills for materials and equipment, and all other indebtedness in connection with the Work for which any third party claim against the Owner might be asserted have been paid or otherwise satisfied; (ii) a certificate evidencing that insurance required by the Contract Documents to remain in force following final payment is currently in effect and will not be canceled or allowed to expire until at least forty-five (45) days' prior written notice has been provided to the Owner; (iii) a written statement that the Contractor knows of no reason that the insurance will not be renewable to cover the period required by the Contract Documents; (iv) consent of the Surety to final payment: and (v) all fully executed and effectual warranties and guaranties associated with the Work, (vi) if required by the Owner, other data establishing the payment or satisfaction of obligations (such receipts, releases and waivers of liens, claims, security interests or encumbrances arising out of the Contract) and such guaranties and indemnities all in such form and detail as may be required by the Owner. If a Subcontractor refuses to furnish a release or waiver required by the Owner, the Contractor may furnish a bond satisfactory to the Owner, in its sole and absolute discretion, sufficient to indemnify the Owner against any claim or lien. If any such claim or lien remains unsatisfied after payments are made, the Contractor shall pay to the Owner all money that the Owner may be compelled to pay in discharging such claim or lien, including all costs associated therewith, including reasonable attorneys' fees. Provided, however, that nothing herein shall be deemed a waiver by the Owner of its sovereign immunity from mechanic's liens.

11.10 **CONTRACTOR'S ACCEPTANCE OF FINAL PAYMENT**: The Contractor's acceptance of final payment constitutes a waiver of all claims against the Owner in connection with the Project, except for any claims for additional payment previously submitted in strict compliance with the claims submission requirements of the Contract Documents and not finally resolved. If at the time Contractor requests Final Payment there are claims pending which were submitted in strict compliance with the claims submission requirements of the Contract Documents, the Owner may pay undisputed portions

of the Final Application and Certificate for Payment as if it were an Application and Certificate for Partial Payment. No payment, final or otherwise, shall operate to release the Contractor, or its Surety, from any obligations under the Contract.

11.11 **RELEASE AND REQUEST FOR FINAL PAYMENT**: Upon completion of the Work and before final payment, the Contractor will submit to the Arlington Public Schools a signed copy of the Arlington Public School Release and Request for Final Payment form as follows:

RELEASE AND REQUEST FOR FINAL PAYMENT

PROJECT NAME: _____

CONTRACT NUMBER: _____

CONTRACTOR NAME: _____

FINAL PAYMENT AMOUNT: _____

TOTAL PAYMENT AMOUNT: _____

FINAL CONTRACT AMOUNT: _____

The Contractor hereby requests final payment in the amount indicated on the above referenced Contract. The Contractor agrees that its acceptance of final payment releases and forever discharges Arlington School Board and the Arlington Public Schools and its officers, employees, servants and agents from any and all actions, claims, demands and liability of whatever nature now existing or which may hereafter arise as a result of or in connection with the above referenced Contract, with the exception of those claims previously submitted in strict compliance with the claims submission requirements of the Contract Documents and not finally resolved.

The Contractor certifies that all of the debts for labor, materials, and equipment incurred in connection with the above referenced Contract have been paid as required by the contract.

_____ _____

AUTHORIZED SIGNATURE DATE

PART 12 PROTECTION OF PERSONS AND PROPERTY

12.1 **CONTRACTOR'S RESPONSIBILITY FOR SAFETY PROCEDURES**: The Contractor shall select one or more on-site personnel whose duty shall be responsible for instituting, maintaining and supervising prudent safety procedures, as well as for complying with all safety laws, regulations, ordinances and other directives of school or jurisdictional authorities in order to prevent injury, damage or loss to:

A. All persons involved in performance of the Work.

B. All APS students, teachers, administrative personnel and employees, the public, and other persons in proximity to, or otherwise affected by the Work.

C. The Work, materials and equipment to be incorporated therein, whether in storage on or off the Site.

D. Property at the Project Site or adjacent thereto and not designated for removal, relocation or replacement in the course of construction.

12.2 **SAFETY BARRIERS AND HAZARD WARNINGS**: The Contractor shall be responsible for erecting and maintaining barricades, construction fences, cordons, or other physical safeguards necessary for protection of persons and property, as well as for posting danger signs and other warnings against hazards and notifying owners and users of adjacent sites and utilities. The Contractor shall also be responsible for promulgating, instituting and maintaining the safety standards outlined in the Specifications.

12.3 **USE OF EXPLOSIVES**: The Contractor's use of explosives on the Owner's property shall be limited to that necessary for the performance of the Work, and will be permitted only after submission of a written request by the Contractor to the Owner, and receipt of written approval from the Owner. The Owner may in its sole discretion deny such request if the use of explosives is not called for by the Specifications. The Owner may in its sole discretion as a condition of granting any approval for the use of explosives set specific times when the explosives may be used, including outside normal working hours and the Contractor shall comply with such time restrictions without additional cost to the Owner. The use of all explosives by the Contractor shall be carried out by qualified personnel in accordance with applicable safety laws and regulations.

12.4 **PROTECTION OF PROPERTY AND PROPERTY DAMAGE**: During performance of the Work and until Final Completion thereof, the Contractor shall be under an absolute obligation to protect the finished and unfinished Work against any damage, loss, or injury. The Contractor shall take proper precautions to protect the finished Work from loss or damage, pending completion and Final Completion of all Work included in the Contract. Such precautions shall not relieve the Contractor from all liability and responsibility for loss or damage to the Work occurring before Final Completion. Such loss or damage shall be at the risk of and borne by the Contractor, whether arising from acts or omissions of the Contractor or others and whether or not covered by the Contractor's builder's risk insurance. In the event of any such loss or damage, the Contractor shall forthwith repair, replace, and make good the Work without extension of time therefore, except as may be otherwise specified in the Contract Documents. The Contractor shall take special precautions throughout all its operations to guard against fire and shall limit the amount of inflammable materials stored at the Project Site to the minimum amount necessary to perform the Work and consistent with the proper handling and storing of such materials.

12.5 **ACCIDENT PREVENTION SUPERVISOR**: The Contractor shall select one or more on-site personnel whose duty shall be site safety and accident prevention. One such person shall be the Contractor's Superintendent, or another key personnel member of its on-site project management team unless otherwise designated by the Contractor in writing to the Owner and the Owner's Representative.

12.6 **OVERLOADING OF STRUCTURES**: The Contractor shall not load or permit any part of the Project Site, whether or not a part of the Work, to be loaded so as to endanger its safety or structural integrity.

PART 13 INSURANCE

13.1 **CONTRACTOR'S INSURANCE**:

A. During the term of this Contract, the Contractor shall procure and maintain, with solvent and responsible companies authorized to do business under the laws of the Commonwealth of Virginia and acceptable to Owner, in its sole discretion, the following types of insurance:

1. Commercial General Liability occurrence-based insurance shall be in the amount of $5/$10 Million ($5 Million per occurrence / $10 Million aggregate. Such insurance shall cover claims for bodily injury, property damage and personal injury arising out of operations under the Contract, whether such actions are performed by the Contractor or by any Subcontractor or by anyone directly or indirectly employed by either of them. Such insurance shall include coverage for explosions, collapse and underground utilities. The Contractor shall provide a certificate of insurance that names Arlington Public Schools / Arlington School Board, including elected and appointed officials, agents and employees as an additional insured. Coverage afforded under this policy shall be primary to all other insurance with respect to Arlington Public Schools including its elected and appointed officials, agents and employees. If the insurance policy represented by certificate requires endorsement in order to add Arlington Public Schools, et al., as an additional insureds, then such endorsement must accompany the Certificate.

2. The Contractor shall require each of its Subcontractors to procure and maintain during the life of its subcontract, subcontractor's Commercial General Liability Insurance in amounts satisfactory to the Contractor, naming the Owner as an additional named insured.

3. Worker's Compensation and Employer's Liability Insurance for the Contractor's employees engaged in the Work under this Contract, in accordance with the laws of the Commonwealth of Virginia. The Contractor shall require each of its Subcontractors to provide Worker's Compensation and Employer's Liability Insurance for all of the Subcontractor's employees engaged on such subcontracts. If any class of employees engaged in work under the Contract is not protected under the Worker's Compensation laws in Virginia, the Contractor shall provide similar protection for these employees in amounts not less than the legal requirements. The amount of Employer's Liability Insurance for the Contractor and each of his subcontractors shall be not less than $1 million.

4. Automobile Liability Insurance, including coverage for non-owned and hired vehicles shall be not less than $5 million per occurrence.

5. All risk insurance covering damage, loss or injury to the Work, excluding earthquake damage. The policy shall be payable to the Owner, and the proceeds thereof, when paid, shall be retained by the Owner as security for the performance by the Contractor of its obligations under this Contract and, upon such performance, shall be released to the Contractor. Such policy shall be in an amount equal to the Contract Sum.

6. Proof, to the satisfaction of the Owner, of insurance for each type of coverage listed herein shall be provided within ten (10) days of the Contractor's receipt of the Notice to Proceed, and no Work shall proceed unless all such insurance is in effect. The Contractor shall not allow any Subcontractor to commence work on its subcontract until all such insurance of the Subcontractor has been so obtained and approved by the Contractor and found to be in accordance with the requirements set forth herein. The Contractor certifies by commencement of the Work that its insurance and that of all Subcontractors is in effect and meets the requirements set forth herein. Copies of Subcontractor insurances shall be kept on file and made available to the Owner upon request.

B. All of the aforesaid insurance policies must be endorsed to provide that the insurance company shall give forty-five (45) days written notice to the Owner if the policies are to be terminated or if any changes are made during the life of the Contract which will affect in any way the insurance requirements set forth herein. Before commencing the Work, the Contractor shall provide the Owner with a copy of each policy which it and each of its Subcontractors shall carry in accordance herewith, together with receipted bills evidencing proof of premium payment.

13.2 **PROPERTY INSURANCE:**

A. The Contractor shall purchase Builder’s Risk insurance upon the entire Work at the Project Site to the full insurance value of the new improvements thereof. This insurance shall include the interests of the Owner, Subcontractors and Sub-Subcontractors in the Work, and shall insure against all risks of loss, except as excluded. This insurance shall include coverage for the following:

1. Loss by explosion of boilers during testing (any exclusion applicable to such loss shall be waived).

2. Partial or complete occupancy by the Owner (any exclusion applicable to occupancy shall be removed).

3. Loss without coinsurance penalty (coinsurance or similar "insurance to value" requirements shall be eliminated).

4. Coverage of property in transit and unscheduled locations sufficient in limits to adequately cover maximum anticipated values at risk.

5. Coverage of Contractor's labor, overhead and profit.

6. Coverage of materials stored or installed on the Project Site, until said materials are accepted by the Owner per Substantial Completion and Acceptance requirements. Payment by Owner for materials stored or installed on the Project Site does not eliminate Contractor's responsibility or liability with regards to theft and vandalism or other damage.

B. At the Owner's sole discretion, Builder's Risk insurance may be purchased by the Owner as specified above. In this event, cost for such coverage shall be deducted from the Contract Sum.

PART 14 CONTRACT SECURITY

14.1 CONTRACT SECURITY:

A. The Contractor shall execute and deliver to the Owner Performance and Labor and Material Payment Bonds on the forms provided in the Contract Documents, each in an amount equal to the Contract Sum. The Performance and Labor and Material Payment Bonds shall be executed by a solvent and responsible surety company licensed to conduct business in the Commonwealth of Virginia, named in the current United States Treasury Department's latest Circular 570 and acceptable to the Owner. These bonds shall be issued and countersigned by a local authorized representative of such surety company who maintains a resident place of business in the Commonwealth of Virginia, regularly commissioned and licensed in the Commonwealth and producing satisfactory evidence of the authority of the person or persons executing the bonds to execute them on behalf of the Surety. The Performance and Labor and Material Payment Bonds shall serve as security for the faithful performance of this Contract, and for the payment of all persons performing labor and furnishing materials and services in connection with this Contract consistent with the requirements of the Virginia Public Procurement Act. The premiums on the Performance and Labor and Material Payment Bonds shall be paid by the Contractor and shall be included in the Contract Sum.

B. If at any time the Owner shall become dissatisfied with any Surety or Sureties providing the Performance or Labor and Material Payment Bonds, or both, or if for any other reason such bonds shall cease to be adequate security for the Contractor, the Contractor shall within ten (10) days after notification of such fact, substitute acceptable bonds in such form and sum and signed by such other Sureties as may be satisfactory to the Owner. The premiums on such Bonds shall be paid by the Contractor and shall be included in the Contract Sum. No further partial payments shall be deemed due nor shall be made until the new Bonds are in effect and provided to and approved by Owner.

C. Alternative Forms of Security: Any bid bond, payment bond, or performance bond required under the Contract Documents may be provided in the form of a certified check, cashier's check, or cash escrow in the face amount required for the bond and conditioned as required for a surety bond. Any bid bond, payment bond or performance bond required under the Contract Documents may be in the form of a personal bond, property bond, or bank or savings institution's letter of credit on certain designated funds in the face amount required for the bond, but only if approved by the Arlington Public Schools Attorney. Approval shall be granted only upon a determination that the alternative form of security proffered affords protection to the Arlington Public Schools equivalent to a corporate surety's bond.

PART 15 UNCOVERING AND CORRECTION OF WORK

15.1 UNCOVERING OF WORK:

A. If a portion of the Work is covered contrary to the Owner's Representatives' request or to the requirements contained in the Contract Documents, the Contractor shall, at its own expense and upon the written request of the Owner's Representative, uncover and replace such Work without an adjustment to the Contract Period or Contract Sum.

B. If a portion of the Work has been covered which the Owner's Representative and/or Arlington County Inspector has not specifically requested to observe prior to its being covered and is, under the Contract Documents, allowed to be covered without observation of the Owner's Representative or Owner or applicable law or regulation, the Owner's Representative and/or Arlington County Inspector may request to see such Work and it shall be uncovered by the Contractor. If such Work is in accordance with the Contract Documents, costs of uncovering and replacement shall, by appropriate Change Order process as set forth in the Contract Documents, be charged to the Owner. If such Work is not in accordance with the Contract Documents, the Contractor shall be responsible for uncovering and replacing such Work and for all costs associated therewith.

15.2 CORRECTION OF WORK:

A. The Contractor shall promptly correct any Work which fails to conform to the requirements of the Contract Documents (the "Rejected Work"), whether observed before or after Substantial Completion and whether or not fabricated, installed or completed. The Contractor shall bear all costs associated with the correction of any Rejected Work, including additional testing and inspections and compensation for the Owner's Representative's services and expenses made necessary thereby.

B. Nothing contained herein shall affect the Owner's right to correct non-conforming Work pursuant to the provisions of the Contract Documents.

15.3 **ACCEPTANCE OF DEFECTIVE OR NON-CONFORMING WORK**: The Owner reserves the right to accept any defective or non-conforming Work; provided, however, that in such event the Contract Sum shall be reduced by an appropriate and equitable amount to account for such defect or nonconformity. Such adjustment shall be effected whether or not final payment has been made. Any such acceptance shall not constitute a waiver of approval of the performance requirements of the Contract Documents.

PART 16 POWERS OF THE PURCHASING AGENT

16.1 **POWERS OF THE PURCHASING AGENT**: The Owner's Purchasing Agent, in addition to those matters expressly made subject to his determination, direction or approval shall have the power:

A. To decide any and all questions, claims and disputes in relation to this Contract and its performance, except as herein otherwise specifically provided, and his decisions upon such questions, claims and disputes shall be final and conclusive upon the parties hereto.

B. To modify or change this Contract in accordance with the Contract Documents so as to require the performance of Extra Work, or the omission of Contract Work or both, whenever he deems it in the interest of the Owner to do so.

C. To suspend the whole or any part of the Work whenever, in his judgment, such suspension is required: (1) in interest of the Owner generally, or (2) to expedite the completion of the Project, or (3) due to a delay caused by the Owner or its authorized representatives.

D. To take over, use, occupy, or operate any part of the completed or partly completed Work if, before Substantial Completion or Final Completion thereof, the Purchasing Agent or his designee, the Owner's Project Manager, shall deem it necessary.

E. The Purchasing Agent may delegate his authority/power to his designee, the Owner's Project Manager, for those matters at Part 15.1.A through 15.1.D, but only to the extent the Contractor has been given written notice by the Purchasing Agent of such delegation.

PART 17 CONTRACTOR'S DEFAULT AND TERMINATION

17.1 OWNER'S RIGHT AND NOTICE:

A. The parties agree that:

1. If the Contractor fails to begin the Work when required to do so; or

2. If, at any time during the progress of the Work, the Owner determines that the Contractor is not prosecuting the Work with reasonable speed and diligence, or is delaying the Work unreasonably or unnecessarily; or

3. If the force of workmen or the quality or quantity of material furnished is not sufficient to ensure completion of the Work within the specified time and in accordance with the Contract Documents; or

4. If the Contractor fails to make prompt payments to suppliers or to Subcontractors for Work performed in connection with the Contract; or

5. If the Contractor fails in any manner of substance to observe the provisions of this Contract; or

6. If any of the Work, machinery, or equipment is defective and is not replaced as herein provided; then the Owner's Representative shall certify such fact or condition to the Owner without prejudice to any other rights or remedies Owner may have hereunder, and the Owner shall have the right to declare the Contractor in default in whole or in part. In the event the Owner elects to declare the Contractor in default, the Owner shall notify the Contractor and its Sureties by written notice describing the nature of the default and providing the Contractor a right to cure such default within three (3) calendar days after the date of the notice, or within such longer period as the Owner, in its sole and absolute discretion, may prescribe. In the event the default is not cured within the time period specified by the Owner, the Owner shall have the right to take any actions necessary to correct or complete the Work as set forth in the Contract Documents.

B. The parties further agree that:

1. If legal proceedings have been instituted by others than the Owner in such manner as to interfere with the progress of the Work and to potentially subject the Owner to the peril of litigation or outside claims; or

2. If the Contractor is adjudicated bankrupt or makes an assignment for the benefit of creditors; or

3. If in any proceeding instituted by or against the Contractor, an order is made or entered granting an extension of the time of payment, composition, adjustment, modification, settlement or satisfaction of its debts or liabilities; or

4. If a receiver or trustee is appointed for the Contractor or the Contractor's property; or

5. If the Contract or any part hereof is sublet without the prior written consent of the Owner; or

6. If the Contract or any rights, moneys, or claims hereunder are assigned in whole or in part by the Contractor, otherwise than as herein specified; or

7. If the Work to be done under this Contract is abandoned; then such fact or condition shall be certified by the Owner’s Representative (Architect) to the Owner and thereupon, without prejudice to any other rights or remedies the Owner may have, the Owner shall have the right to terminate the Contract immediately upon written notice to the Contractor or, in the Owner’s sole discretion, exercise any other rights available to it.

17.2 **CONTRACTOR'S DUTY UPON DEFAULT**: Immediately, but no later than three (3) days after receipt of notice that it is in default hereunder, the Contractor shall discontinue all further operations in connection with the Work, or such specified part thereof, and shall immediately vacate the Project Site, or such specified part thereof, leaving untouched all plant, materials, equipment, tools, supplies and job site records.

17.3 **COMPLETION OF WORK AFTER DEFAULT:**

A. If the Contractor defaults or neglects to perform the Work in accordance with the Contract Documents and fails within a three (3) day period after receipt of written notice from the Owner to commence and continue correction of such default or neglect, the Owner may, without prejudice to the other rights the Owner may have, correct such defaults or deficiencies by such means and in such manner, by contract with or without public letting, or otherwise as it may deem advisable, utilizing for such purpose without additional cost to the Owner such of the Contractor's plant, materials, equipment, tools and supplies remaining on the Project Site, and also such Subcontractors as it may deem advisable and may take any or all of the following actions:

1. Have the defaulted Work performed by others;

2. Supplement the Contractor's work force;

3. Withhold payments due the Contractor and use such payments to satisfy any claims for moneys owed by the Contractor in connection with the Project, in accordance with any provisions of the Contract Documents;

4. Replace or repair any defective Work;

5. Notify the Surety of such default and make demand upon the Surety as may be applicable under the circumstances of the default, but Owner shall be under no obligation to notify the Surety;

6. Terminate the Contractor's performance of the Contract.

B. The Contractor and its Sureties shall bear all costs associated with completing or correcting the Work, including without limitation, the cost of re-letting, the amount of any liquidated damages, and any and all costs incurred in connection with the Owner's exercise of any right upon default. Any costs incurred in connection with completing or correcting the Work shall be deducted from the amounts then or thereafter due the Contractor. In the event such amounts are not sufficient to cover the costs incurred in connection with completing or correcting the Work, the Contractor and its Surety shall pay to the Owner the amount of any deficiency.

17.4 **PARTIAL DEFAULT**: In the event the Owner declares the Contractor in default in accordance with the provisions of the Contract Documents with respect to a portion of the Work, the Contractor shall discontinue such portion of the Work declared in default, shall continue performing the remainder of the Work in strict conformity with the terms of the Contract and shall not hinder or interfere with any other contractor or persons whom the Owner may engage to complete the Work for which the Contractor was declared in default. The expense of such completion shall be paid by the Contractor and its Sureties as provided in the Contract Documents.

17.5 **DEATH OR INCOMPETENCE OF CONTRACTOR**: In the event of the death, dissolution or legal incompetence of a Contractor who shall be an individual or surviving member of a sole proprietor contracting firm, such death or adjudication of incompetence shall not terminate the Contract, but shall constitute a default hereunder to the effect provided in Paragraphs 17.1, 17.2 and 17.3 hereof, and the estate of the Contractor and his sureties, if any, shall remain liable hereunder to the same extent as though the Contractor remained living. Notice of default, as provided in Paragraph 17.1 hereof, shall not be required to be given in the event of such death or adjudication of incompetence.

17.6 **OWNER'S RIGHT TO TERMINATE**: Notwithstanding the rights of the Owner or defaults outlined above, the Owner shall have the right to terminate this Contract, in whole or in part, at its own convenience for any reason by giving seven (7) days prior written notice of termination to the Contractor. In such event, the Contractor shall be paid an amount equal to the lesser of: (1) the actual cost of any Work actually performed or in place and the actual cost of any labor, equipment or materials ordered in good faith which could not be canceled, less the salvage value thereof, plus 10%; or (2) the pro rata percentage of completion based upon the approved Schedule of Values, Section 01291 of the Specifications, plus the actual cost of any labor, equipment or materials ordered in good faith which could not be canceled, less the salvage value thereof. Each subcontract shall contain a

similar termination provision for the benefit of the Contractor and the Owner. The Contractor shall not be entitled to receive anticipated profits on unperformed portions of the Work. The Owner shall have the right to employ an independent accounting firm to verify any amounts claimed by the Contractor to be due under this Paragraph. The Owner shall have the right of audit (and Contractor shall have the obligations) stated in Paragraph 9.5, insofar as they pertain to amounts claimed to be due hereunder. In the event a termination by the Owner for default, in whole or in part, subsequently is determined to have been without sufficient justification, such termination shall be deemed a termination for convenience and the Contractor's remedies shall be limited as provided in this Paragraph 17.6.

18 MISCELLANEOUS SPECIAL CONDITIONS

18.1 **LAYING OUT WORK**: The Contractor shall, upon entering the Project Site for the purpose of commencing the Work, locate all general reference points and take all such action as is necessary to prevent their destruction; lay out the Work, except where otherwise required by Contract Documents, and be responsible for all lines, elevations, measurements of buildings, grading, paving, utilities and other Work executed under the Contract. If benchmarks or other general reference points necessary for layout of the Work supplied by the Owner are impaired or destroyed by the Contractor, the Contractor shall be responsible at its cost to re-establish such benchmarks or general reference points. The Contractor shall exercise proper and reasonable care in verifying figures shown on the Drawings before laying out the Work and will be held responsible for any error resulting from its failure to exercise such care. The Contractor shall establish permanent benchmarks referenced to finish floor lines. Contractor shall employ a licensed surveyor who shall, after masonry corners have been set, certify on a drawing over its seal to the Owner that the building is located properly in relation to property lines and in accordance with the Drawings.

18.2 **INSPECTION AND APPROVAL OF SITE IMPROVEMENTS:**

A. On-site and off-site improvements shall conform to Arlington County Design and Construction Standards.

B. The Contractor shall notify the Owner's Representative three (3) days prior to the beginning of all street or storm sewer Work.

C. All Work shall be staked out by a certified surveyor and cut sheets shall be submitted to the Arlington County Department of Environmental Services with a copy to the Owner's Representative before commencing such Work.

D. The Contractor shall perform the Work in such a manner as to control surface flow of water to minimize its impact upon the Work or adjacent properties, in accordance with all State of Virginia and Arlington County regulations and to prevent the washing of any soil, silt or debris onto adjacent properties. The Contractor shall be held responsible for any damage resulting from its failure to control surface flow or to prevent the washing of such materials upon adjacent properties for a period of one year after Final Completion of the completed Work.

18.3 **PARTIAL USE OR OCCUPANCY:**

A. The Contractor shall permit the Owner to use and occupy any defined portion or unit of the Project prior to Substantial Completion of the portion of the Project of which it is a part.

B. The Owner's use and occupancy shall not constitute Substantial Completion or Final Completion of the Work and shall in no event relieve the Contractor of its obligation to maintain the insurance coverage described in Paragraph 13.1 hereof.

18.4 **RELEASE OF BONDS**: No bond required by the Contract Documents shall be deemed released without a written release from the Owner specifically granting such release.

18.5 **MATERIALS AND EQUIPMENT**: No materials or equipment containing asbestos or any other hazardous material recognized and identified by the Commonwealth of Virginia Department of Environmental Quality shall be utilized in the construction of the Project. In the event a substitute product is needed and time does not allow for the mandated submittal process, the Contractor shall confirm these materials do not contain asbestos or any other hazardous material as noted above in writing to the Owner or Owner’s Representative and will provide the MSDS sheets to the Owner and Owner's Representative prior to being allowed to install the product on the Project.

End of General Conditions

Standard Labor and Material Payment Bond

THIS BOND IS ISSUED SIMULTANEOUSLY WITH STANDARD PERFORMANCE BOND IN FAVOR OF THE OBLIGEE CONDITIONED ON THE FULL AND FAITHFUL PERFORMANCE OF THE CONTRACT

Bond #:_____
Amount: _____

KNOW ALL MEN BY THESE PRESENTS: That

_____

_____

(insert full name or legal title of Contractor and address)

as Principal, and _____

(insert full legal title of the Surety)

a corporation duly organized under the laws of the State of _____ and qualified to do business in Virginia, having its principal place of business at

_____

_____,

as Surety, are held and firmly bound unto the Arlington Public Schools and

_____

(name of the Agency or Institution of the Commonwealth)

as Obligee, in the amount of _____ Dollars($_____), for the payment whereof Principal and Surety bind themselves, their heirs, executors, administrators, successors and assigns, jointly and severally, firmly by these presents.

WHEREAS,

Principal has by written agreement dated _____, 20___, entered into a contract with Obligee for _____the **Jefferson Middle Gym Roof Replacement, Located at 125 S. Old Glebe Road , Arlington, VA, 22204**, which Contract 17FY20 (the "Contract") is by reference expressly made a part hereof.

NOW THEREFORE, THE CONDITION OF THIS OBLIGATION is such that if Principal shall promptly

make payment to all claimants as hereinafter defined, for labor performed and material furnished in the prosecution of the work provided for in the Contract, then this obligation shall be void; otherwise it shall remain in full force and effect, subject however, to the following conditions.

The Principal and Surety hereby jointly and severally agree as follows:

1. A claimant is defined as one having a direct contract with the Principal or with a subcontractor of the Principal but who has no contractual relationship, express or implied, with the Principal, for labor, material, or both for use in the performance of the Contract. A "subcontractor" of the Principal, for the purposes of this bond only, is one who has a direct contract with the Principal, express or implied. "Labor" and "material" shall include, but not be limited to, public utility services and reasonable rentals of equipment, but only for periods when the equipment rented is actually used at the work site.

2. Subject to the provisions of paragraph 3, any claimant, who has performed labor or furnished material in accordance with the Contract Documents in the prosecution of the work provided in the Contract, who has not been paid in full therefor before the expiration of ninety (90) days after the day on which such claimant performed the last of such labor or furnished the last of such materials for which he claims payment, may bring an action on this bond to recover any amount due him for such labor or material, and may prosecute such action to final judgment and have execution on the judgment. The Obligee need not be a party to such action and shall not be liable for the payment of any damages, costs or expenses of any such suit.

3. Any claimant who has a direct contractual relationship with any subcontractor of the Principal , but who has no contractual relationship, express or implied, with the Principal, may bring an action on this bond only if he has given written notice to the Principal within ninety (90) days from the day on which the claimant performed the last of the labor or furnished the last of the materials for which he claims payment, stating with substantial accuracy the amount claimed and the name of the person for whom the work was performed or to whom the material was furnished. Notice to the Principal shall be served by registered or certified mail, postage prepaid, in an envelope addressed to the Principal at any place where his office is regularly maintained for the transaction of business. Claims for sums withheld as retainages with respect to labor performed or materials furnished shall not be subject to the time limitations stated in this paragraph.

4. No suit or action shall be commenced hereunder by any claimant:

    a. Unless brought within one year after the day on which the person bringing such action last performed labor or last furnished or supplied materials.

    b. Other than in a Virginia court of competent jurisdiction, with venue as provided by statute, or in the United States District Court for the district in which the project, or any part thereof is situated.

Signed and sealed this _____ day of _____, 20_____.

_____
Principal

_____
Witness

By: _____
Title

_____ (SEAL)
Surety

_____
Resident Virginia Agent

By: _____
Title

AFFIDAVIT AND ACKNOWLEDGMENT OF SURETY

COMMONWEALTH OF VIRGINIA
CITY/COUNTY OF _____, To-wit:

I, the undersigned notary public, do certify that _____ personally appeared before me in the jurisdiction aforesaid and made oath that he/she is attorney-in-fact of the _____ (Name of Surety), that he/she is duly authorized thereby to execute in its behalf a certain (performance)(payment) bond in the sum of _____ _____ Dollars ($_____), dated the _____ day of _____, 20___, wherein Arlington Public Schools is the Obligee, _____ is the Principal and _____ is Surety, by virtue of a certain power of attorney made by said Surety, dated _____ and _____ RECORDED in the Clerk's Office of the Circuit Court of _____, Virginia, in Deed Book _____, Page _____, or Instrument # _____ / NOT RECORDED (check applicable box); that the said power of attorney has not been revoked; that the said Surety is legally qualified to do business in Virginia; and, that the said _____ thereupon, in the name and on behalf of the said Surety, acknowledged the aforesaid bond as its act and deed.

Given under my hand this _____ day of _____, 20_____ .

_____
Notary Public

My Commission expires: _____

End of Standard Labor and Material Payment Bond

Standard Performance Bond

Bond #:_____
Amount: _____

KNOW ALL MEN BY THESE PRESENTS: That _____

_____
(insert full name or legal title of Contractor and address)
as Principal, and _____,
(insert full legal title of the Surety)
a corporation duly organized under the laws of the State of _____ and qualified to do business in Virginia, having its principal place of business at
_____
_____,
as Surety, are held and firmly bound unto the Arlington Public Schools and
_____
(name of the Agency or Institution of the Commonwealth)
as Obligee, in the amount of _____ Dollars ($_____), for the payment whereof Principal and Surety bind themselves, their heirs, executors, administrators, successors and assigns, jointly and severally, firmly by these presents.

WHEREAS,

Principal has by written agreement dated _____, 20_____, entered into a contract with Obligee for **the Jefferson Middle Gym Roof Replacement, located at 125 S. Old Glebe Road Arlington, VA, 22204**, which Contract 17FY20 (the "Contract") is by reference expressly made a part hereof.

NOW, THEREFORE, THE CONDITION OF THIS OBLIGATION is such that, if the Principal shall promptly and faithfully perform said Contract in strict conformity with the plans, specifications and conditions of the Contract, then this obligation shall be null and void; otherwise it shall remain in full force and effect.

Provided, that any alterations which may be made in the terms of the Contract, or in the work to be done under it, or the giving by the Obligee, or either of them of any extension of time for the performance of the Contract, or any other forbearance on the part of either or both of the Obligee or the Principal to the other shall not in any way release the Principal and the Surety, or either of them, their heirs, executors, administrators, successors or assigns from their liability hereunder, to all of which this Obligation shall be fully applicable, notice to the Surety of any such alterations, extension, or forbearance being hereby waived.

No action shall be brought on this bond unless brought within one (1) year after: (a) completion of the Contract, including expiration of all warranties and guarantees, or (b) discovery of the defect or breach of warranty or guarantee if the action be for such.

The Surety hereby certifies that this Performance Bond shall be effective as of the date the Contractor signs the Contract.

The Surety represents to the Principal and to the Obligee that it is legally authorized to do business in the Commonwealth of Virginia.

Signed and sealed this _____ day of _____, 20_____.

_____ Principal

_____
Witness

By: _____
Title

_____ (SEAL)
Surety

_____
Resident Virginia Agent

By: _____
Title

AFFIDAVIT AND ACKNOWLEDGMENT OF SURETY

COMMONWEALTH OF VIRGINIA
CITY/COUNTY OF _____, To-wit:

I, the undersigned notary public, do certify that _____ personally appeared before me in the jurisdiction aforesaid and made oath that he/she is attorney-in-fact of the _____ (Name of Surety), that he/she is duly authorized thereby to execute in its behalf a certain (performance)(payment) bond in the sum of _____ _____ Dollars ($_____), dated the _____ day of _____, 20___, wherein Arlington Public Schools is the Obligee, _____ is the Principal and _____ is Surety, by virtue of a certain power of attorney made by said Surety, dated _____ and _____ RECORDED in the Clerk's Office of the Circuit Court of _____, Virginia, in Deed Book _____, Page _____, or Instrument # _____ / NOT RECORDED (check applicable box); that the said power of attorney has not been revoked; that the said Surety is legally qualified to do business in Virginia; and, that the said _____ thereupon, in the name and on behalf of the said Surety, acknowledged the aforesaid bond as its act and deed.

_____
Notary Public

My Commission expires: _____

Contractor: _____

Name of Surety: _____

Address: _____

Suite: _____

City, State, Zip: _____

Telephone Number: _____

Fax Number: _____

Agent Information:

Contact Person: _____

Firm Name: _____

Address: _____

Suite: _____

City, State, Zip: _____

Telephone Number: _____

Fax Number: _____

End of Standard Performance Bond

ARLINGTON PUBLIC SCHOOLS

THOMAS JEFFERSON MIDDLE SCHOOL GYMNASIUM

CONSTRUCTION DOCUMENTS

ROOF REPLACEMENT

ITB# 17FY20

February 26, 2020

Prepared by:

Gale Associates, Inc.
1122 Kenilworth Drive, Suite 206
Towson, MD 21204-2143
443-279-4500

GALE JN 670622

Prepared for:

Arlington Public Schools
2770 South Taylor Street
Arlington, VA 22206

TABLE OF CONTENTS

DIVISION 00 - GENERAL REQUIREMENTS
001100 INSTRUCTION TO BIDDERS
004000 AGREEMENT BETWEEN OWNER AND CONTRACTOR
004200 BID FORM
006110 STANDARD PERFORMANCE BOND
006120 STANDARD LABOR AND MATERIAL PAYMENT BOND
007000 GENERAL CONDITIONS

DIVISION 01 - GENERAL REQUIREMENTS
011100 SUMMARY OF WORK
012200 UNIT PRICES
012300 ALTERNATES
012600 CONTRACT MODIFICATION PROCEDURES
013300 SUBMITTAL PROCEDURES
015000 TEMPORARY FACILITIES AND CONTROLS
016500 PRODUCT DELIVERY REQUIREMENTS
017700 CLOSEOUT PROCEDURES

DIVISION 02 – EXISTING CONDITIONS
024119 SELECTIVE STRUCTURE DEMOLITION
027490 PAVEMENT REPAIR
029200 LAWNS AND GRASSES

DIVISION 05 - METALS
051200 STRUCTURAL STEEL FRAMING
053100 STEEL DECKING

DIVISION 06 - WOOD, PLASTICS, AND COMPOSITES
061000 ROUGH CARPENTRY

DIVISION 07 - THERMAL AND MOISTURE PROTECTION
072200 ROOF AND DECK INSULATION
074243 COMPOSITE WALL PANELS
075216 MODIFIED BITUMINOUS MEMBRANE ROOFING
075420 THERMOPLASTIC ROOFING (ALTERNATE No.1)
076000 FLASHING AND SHEET METAL
077200 ROOF ACCESSORIES

DIVISION 09 – FINISHES
099100 PAINTING
099653 ELASTOMERIC COATINGS

DIVISION 22 – PLUMBING
221426.13 ROOF DRAINS

DIVISION 23 – HEATING, VENTILATING AND AIR CONDITIONING
230510 MECHANICAL/ELECTRICAL GENERAL REQUIREMENTS

LIST OF DRAWINGS

G-001	COVER SHEET
G-002	STANDARD ABBREVIATIONS, LEGEND, SYMBOLS AND GENERAL NOTES
G-003	TYPICAL FLASHING CONFIGURATIONS
C-101	SITE PLAN
A-100	OVERALL ROOF AREA AND CONCEPTUAL TAPERED INSULATION PLAN
A-101	PARTIAL ROOF AREA PLAN
A-102	PARTIAL ROOF AREA PLAN
A-501	DETAILS – EXISTING CONDITION AND NEW CONSTRUCTION
A-502	DETAILS – NEW CONSTRUCTION
A-503	SHEET METAL ISOMETRIC DETAILS
S-100	FRAMING PLAN AND STRUCTURAL DETAILS

END OF TABLE OF CONTENTS

SECTION 011100 - SUMMARY OF WORK

PART 1 - GENERAL

1.1 SUMMARY

A. This Section outlines the scope of work included in the roof replacement project at the Thomas Jefferson Middle School Gymnasium in Arlington, VA. Refer to the appropriate specification section for further information about installation methods and components to be provided. In general, the work includes, but is not limited to, the following items:

1. Remove and dispose of existing roofing systems and components, including membrane, insulation, vapor barriers, flexible and metal flashings, and associated materials and components down to structural deck unless otherwise noted (Division 02 Section "Selective Structure Demolition").
2. Repair paved surfaces and landscaping damaged as a result of roof replacement project (Division 02 Sections "Pavement Repair" and "Lawn and Grasses").
3. Augment existing trusses as indicated on the Drawings (Division 05 Section "Structural Steel Framing").
4. Provide fire-treated wood blocking at perimeter edges, walls, stud walls, and penetrations (Division 06 Section "Rough Carpentry").
5. Provide new multi-layered insulation systems throughout the roof areas (Division 07 Section "Roof and Deck Insulation").
6. Provide composite panels at walls and at plywood enclosures (Division 07 Section "Composite Wall Panels).
7. Provide new 2-ply SBS modified bitumen roof membrane, 2-ply SBS modified flashing system, and associated roof system components. Provide white EPDM membrane at locations indicated on Drawings (Division 07 Section "Modified Bituminous Membrane Roofing").
8. Provide fully adhered thermoplastic roof system overlay (Division 07 Section "Thermoplastic Roofing").
9. Provide perimeter and penetration sheet metal flashings and counterflashings, and miscellaneous sheet metal fabrications (Division 07 Section "Flashing and Sheet Metal").
10. Provide roof hatch. Provide concrete splash blocks at existing downspouts (Division 07 Section "Roof Accessories").
11. Prepare, prime, and paint existing steel trusses to be augmented (Division 09 Section "Painting").
12. Provide two (2) coats elastomeric coating on newly installed roof systems, including flashings, (Division 09 Section "Elastomeric Coatings").
13. Provide roof drain assemblies at existing roof drain locations and leader piping and extensions at existing vent pipe (Division 22 Section "Roof Drains").
14. Temporarily disconnect/reconnect electrical conduit mounted to steel framing as required to complete truss augmentation (Division 23 Section "Mechanical/Electrical General Requirements").

B. The Contract Documents showing the existing construction of the facility were developed from historic documents and from limited field observations by the Architect and its consultants. Actual conditions may vary from those shown. Hidden conditions may be discovered over the course of the work. Further evaluation may uncover conditions which may require remedial attention prior to proceeding with demolition or construction. Contractor shall be aware of the need to proceed with diligence and care and shall notify Architect of conditions which do not reflect those indicated or which require further testing and repair prior to proceeding. Contractor shall correct conditions that are detrimental to timely and proper execution of the Work. Contractor shall not proceed until unsatisfactory conditions have been corrected. Commencement or continuation of work constitutes acceptance of conditions and responsibility for satisfactory performance.

1.2 PROJECT CONDITIONS

A. The building will be occupied and in use during construction. Take necessary precautions to create as little disturbance or disruption to the building and its occupants as possible during the work.

B. Supply, install, and maintain barriers, protection, warning lines, lighting, and personnel required to segregate the work area(s) from pedestrian or vehicular traffic, as well as to prevent damage to the building, its occupants, and the surrounding landscaped and paved areas. The Contractor shall observe all applicable OSHA and local requirements.

C. Schedule and execute work without exposing the building interior to the effects of inclement weather. Protect the building and its occupants against such risks and repair/replace work-related damage to the Owner's satisfaction.

D. The Contractor shall not be responsible for reported roof related leaks which exist prior to initiating work in the leak areas. The Contractor shall be responsible for all roof related leaks and damage to existing roofing at all locations in which he has initiated work, to include trafficking and materials storage. If damage occurs, the Contractor shall repair damaged areas. Provide and maintain necessary protection and repairs to existing roofing to prevent interior leakage.

E. Supply labor, equipment, tools and appliances necessary for the proper completion of the work.

F. Do not install roofing systems or sealants during precipitation, including fog, or when air temperature is below 40° F (4° C) or is expected to go below 40° F (4° C) during application, or when there is ice, frost, moisture, or visible dampness on the roof.

G. Phased or temporary construction will only be permitted as specified. Schedule, execute, and coordinate work on a daily basis so that components are installed completely and permanently as specified.

H. Schedule, coordinate, and execute work to avoid traffic on completed roof areas. Coordinate work to prevent this situation by working away from completed roof areas, toward roof edges and access ways.

I. Roofing that is removed shall be made 100% weathertight in the same day's operations.

J. Supply shoring, supports, and other items or materials necessary to brace and support the structure, fixtures, and facilities affected by the work. This includes, but is not limited to, heating and air handling ducts, lighting, rooftop equipment and other items presently supported by or suspended from the roof decks to be removed, and associated structural members. Supply temporary walkways and ramps necessary to remove existing decking systems and install the replacement deck materials.

K. Roof construction and materials shall comply with these specifications and the latest editions of the following:

1. Sheet Metal and Air Conditioning Contractors National Association (SMACNA)
2. The National Roofing Contractors Association (NRCA) "Roofing and Waterproofing Manual"
3. The Asphalt Roofing Manufacturers Association (ARMA).
4. Factory Mutual Global (FMG) publications "Loss Prevention Data for Roofing Contractors" and "Building Materials Approval Guide"
5. Underwriters Laboratories, Inc. "Roofing Materials and Systems Directory"
6. All work shall be performed in accordance with the International Building Code (IBC) in effect at the time of Bid and applicable Federal, State, and local code amendments, requirements, and publications.

L. All workmanship and materials shall be of the best construction practice. Should a conflict arise between the specification requirements and those of the referenced publications, the better quality or more stringent requirement will prevail. Specification requirements that exceed the minimum requirements of the Manufacturer shall be complied with by the Contractor.

M. Coordinate the work in this Section with other Sections, including preparatory work, building protection, daily clean-up, and protection of building and occupants.

N. Supply labor, vacuums, tools and appliances necessary to keep the interior and exterior building and site areas below and around the construction clean, with as little accumulation of dust and debris as possible on a daily basis.

O. Work will be observed by an on-site observer paid for by the Owner.

1.3 REFERENCES

A. Applicable publications: Publications listed herein form a part of this Specification to the extent referenced and are indicated in the text by basic designation only. Applicable publications referenced shall be those that were issued and in use at the time of the Bid Submission.

1.4 PRECONSTRUCTION CONFERENCE

A. A preconstruction conference will be held with the Owner, Owner's Representatives, Contractor, and involved trades to discuss all aspects of the project. The Contractor's foreman or field representative will attend this conference. The foreman must be proficient in reading and writing English and shall be on site at all times that work is performed.

B. The Owner shall reserve the right to require an alternate superintendent and/or foreman.

C. The preconstruction conference shall not be held until all specified submittals have been received, reviewed, and accepted as to form by the Owner and Owner's Representative.

D. Delivery of materials and commencement of construction shall not proceed until the preconstruction conference is held. Delays in obtaining a complete set of submittals shall not extend the contracted completion date.

1.5 EMERGENCY RESPONSE

A. The Contractor shall provide the Owner with after-hours (24-hour) emergency telephone numbers of the Contractor's superintendent and foreman.

B. The Contractor must respond to emergency situations or calls within two (2) hours.

1.6 CONSTRUCTION SCHEDULE

A. It is the intent of the Owner to have portions of the existing roof assembly removed and replaced in a completed, watertight condition on a daily basis.

B. The Contractor shall be permitted to perform all aspects of the work when school is not in session based upon the school schedule. The Contractor may be permitted to perform limited aspects of work while school is in session based upon the following conditions:

1. The Owner has reviewed and approved the Contractor's construction schedule.
2. The Owner has sufficient time to control occupancy beneath the scheduled work area.
3. The Owner determines that the disruption to building occupants from the construction is tolerable.
4. The Contractor has taken additional measures necessary to prevent fumes and odors associated with solvents and heated bitumen from entering the occupied space.

C. Proper coordination of all aspects of the work by the Contractor and any sub-trades is critical to ensure proper installation and performance of the work. The Contractor's Construction Schedule shall clearly outline the coordination between job tasks of all involved disciplines. Subject to review and acceptance by the Owner, this Schedule will be strictly adhered to by the Contractor and sub-trades.

D. The Contractor's Construction Schedule shall clearly identify the on-site crew foreman and the size of the crew to be utilized. The crew size shall remain consistent and work shall be continuous throughout the project, from start-up to completion.

E. The Owner shall review the Contractor's Construction Schedule prior to the start of any work. After defining the location(s) of the work progress, the Owner shall arrange to control occupancy in the building to the greatest extent possible. It shall be the responsibility of the Contractor to supply the Owner with written notice, 72 hours in advance, if his work location(s) for a workday is different from the schedule. The Contractor shall update his Construction Schedule weekly and submit a copy to the Owner for review.

F. The Contractor shall schedule periodic site visits by the Membrane Manufacturer providing the warranty during the construction period. Announce the Manufacturer's site visit (inspection) to the Owner 72 hours prior to its occurrence. Visits by the manufacturer's representative shall be made regularly throughout the project. The Contractor shall provide the Owner a copy of the Manufacturer's written report for each inspection, indicating Manufacturer's comments pertaining to installation of materials and any corrective recommendations. In addition, the Contractor is responsible to notify and obtain acceptance from the Membrane Manufacturer on detail changes that may affect the roof system warranty.

1.7 SCHEDULE OF VALUES

A. Provide a line item breakdown of construction labor and materials costs for each Specification Section included in these Contract Documents. Additionally, provide line item values for Unit Price, Alternate, and Allowance Work included in these Specifications. Utilize AIA Forms G702 and G703, to prepare and submit the Schedule of Values.

1.8 WORK HOURS

A. The Contractor will be allowed to work on the roof between the hours of 7:00 am and 9:00 pm, local time, Monday through Friday. Work outside these hours may be allowed with 48 hours' minimum written notice to the Owner. Work on Saturday may be performed from 10:00 am to 9:00 pm, with prior approval from the Owner. Construction hours and noise shall be limited as indicated by the Arlington County noise ordinance. The Owners reserves the right to disapprove or suspend a request to work outside of normal working hours. The Owner also reserves the right to determine when building coverage is necessary or in the best interest of the Owner. The cost of providing building maintenance personnel onsite for weekend work or after hours work shall be borne by the Contractor.

1.9 PROGRESS MEETINGS

A. Progress meetings shall be scheduled bi-weekly by the Owner or as deemed necessary.

1.10 DIMENSIONS AND QUANTITIES

A. Verify dimensions and quantities in the field prior to bid submission. The Project Plans and Drawings have been compiled from various sources and may not reflect the actual field conditions at the time of construction.

B. The Contractor is solely responsible for means and methods of construction. Make necessary investigations to become familiar with the project conditions.

C. Additional compensation due to unfamiliarity with project conditions will not be considered.

D. In case of inconsistency between Drawings and Specifications or within either document, the better quality and/or greater quantity of work shall be provided, as determined by the Owner.

1.11 SAFETY DATA SHEETS

A. Safety Data Sheets (SDSs) shall be submitted in complete sets to the Owner for all products to be used prior to any work being performed.

1.12 GUARANTEES AND WARRANTIES

A. Refer to specific Sections of this specification for systems and product warranty requirements. Verify with Manufacturer of proposed systems and products that specified warranty requirements are acceptable, without exception, prior to selecting materials for use on this project.

B. Submit a full Contractor's Guarantee of the Work to be free from defect in materials and workmanship upon Substantial Completion, and prior to final payment. This Guarantee shall be for a period of five (5) years from the date of Substantial Completion, and shall be signed by a Principal of the Contractor's firm, and sealed if a corporation.

1.13 CLEAN-UP

A. Restore property of the Owner to its original condition prior to the start of construction. Refer to Division 01 Section "Temporary Facilities and Controls." General clean-up of the site shall be performed on a daily basis.

B. Clean, restore, and/or replace items stained, dirtied, discolored, or otherwise damaged due to the Work, as required by the Owner.

C. Clean roof, building (interior and exterior), landscaped areas, and parking areas so they are free of trash, debris, and dirt caused by or associated with the Work.

D. Clean out drain leaders and piping to the point where it exits the building. Demonstrate roof drainage systems are operating by running water from a hose for 30 minutes into each drain in the presence of the Owner.

E. Sweep paved areas clean.

1.14 PERMITS

A. The Contractor will obtain and pay for any and all permits required to perform the work.

B. It is understood that Arlington County requires a permit for the roof replacement project.

1.15 OWNER OCCUPANCY

A. Owner will occupy premises during entire construction period. Cooperate with Owner in scheduling operations to minimize conflict with Owner's use of facility.

B. Predetermine and obtain approval, in advance, from Owner, for vertical and horizontal transportation of labor and construction materials onto and off of the building roof.

C. Do not transport labor or construction materials to the roof via the interior of the facility.

D. Utility Shutdowns: Obtain written approval from the Owner for any required shutdown or outage of any utility. Schedule any outages to minimize impact on existing operations. Comply with all applicable codes and ordinances.

1.16 PRE-JOB DAMAGE SURVEY OF FACILITY

A. Perform a thorough pre-job survey of property and all affected and adjacent areas of the building with Owner prior to starting the work in order to document existing damage. Contractor shall document the survey on video tape and provide a copy to the Owner prior to commencing work. Damaged items identified during the survey will not be the responsibility of Contractor unless further damaged by Contractor during execution of project.

1.17 CORRECTION OF DAMAGE TO PROPERTY

A. Consider any damage to building or property not identified in the pre-job damage survey as having resulted from execution of this Contract and correct at no additional expense to Owner.

B. The Contractor will include in the Base Bid the cost to perform any roof related repair that is due to Contractor's faulty workmanship and/or materials.

C. Repair, immediately, damages to facility or site that present a safety hazard or danger to the public.

1.18 SUMMARY OF PROJECT REQUIREMENTS

A. The Work requirements of the Contract are summarized by reference to the Bidding Requirements, the Contract forms, the Conditions of the Contract, the Specification, the Drawings, and Addenda and Contract Modifications, including, but not limited to, the printed matter referenced in these requirements. It is recognized that the Work is affected or influenced by governing regulations, natural phenomenon (including weather conditions), unforeseen conditions uncovered by the Work, and other forces outside of the Contract Documents.

PART 2 - PRODUCTS (Not Used)

PART 3 - EXECUTION (Not Used)

END OF SECTION 011100

SECTION 012200 - UNIT PRICES

1.1 SUMMARY

A. The Owner may elect certain aspects of the work, whose quantity cannot be determined at this time, to be performed or deleted by the Contractor. If such work items are elected or are not performed, the Contract price will be adjusted accordingly by the Unit Price amount shown for each item in the Bid Forms.

1.2 GENERAL CONDITIONS

A. A Unit price is a price per unit of measurement for materials or services added to or deducted from the Contract Sum by appropriate modification, if estimated quantities of Work required by the Contract Documents are increased or decreased.

B. By submitting a bid, the Contractor acknowledges acceptance of the established Unit Prices for their use in determining the value of change work. Prices as stated will remain in effect until final completion of the Contract.

C. Performance of Work not authorized by a Change Order or Field Order, whether or not such work is set forth hereunder as a Unit Price item, shall not be considered cause for extra payment beyond the Contract Sum.

1.3 PROCEDURES

A. Unit prices include all necessary material, plus cost for delivery, installation, insurance, applicable taxes, overhead, and profit.

B. Prior to commencing removal or replacement of materials set forth in the schedule of Unit Prices, the Contractor shall notify the Owner in sufficient time to permit proper inspection and measurements to be taken. Only quantities that have been approved in writing by the Owner will be considered in determination of adjustments to the Contract Amount.

C. Unit Prices and quantities are provided to adjust the specific work items because quantity of work is unknown. Work of similar scope as those unit price items contained in and defined by the Construction Documents shall not be considered as Unit Price Work.

D. Owner reserves the right to reject Contractor's measurement of work-in-place that involves use of established unit prices and to have this work measured, at Owner's expense, by an independent inspector acceptable to Contractor.

E. List of Unit Prices: A list of unit prices and quantities to be provided in the Base Bid is included in Part 3. The quantities shown in the list of unit prices shall be ***EXCLUSIVE*** of the quantities shown on the drawings. Specification sections referenced in the schedule contain requirements for materials described under each unit price.

PART 2 - PRODUCTS (Not Used)

PART 3 - EXECUTION

3.1 LIST OF UNIT PRICES

A. For scraping and priming of more/less surface rusted areas of steel deck and framing than the two thousand five hundred (2,500) square feet carried in the Base Bid as outlined in Division 05 Section "Steel Decking."

B. For removal and replacement of more/less steel deck than the one thousand five hundred (1,500) square feet carried in the Base Bid as outlined in Division 05 Section "Steel Decking."

C. For the removal and replacement of more/less fiberglass insulation in the deck flutes than the two thousand (2,000) square feet carried in the Base Bid as outlined in Division 07 "Roof and Deck Insulation."

END OF SECTION 012200

SECTION 012300 - ALTERNATES

PART 1 - GENERAL

1.1 SUMMARY

A. This Section includes administrative and procedural requirements for alternates.

1.2 DEFINITIONS

A. Alternate: An amount proposed by bidders and stated on the Bid Form for certain work defined in the Bidding Requirements that may be added to or deducted from the Base Bid amount if Owner decides to accept a corresponding change either in the amount of construction to be completed or in the products, materials, equipment, systems, or installation methods described in the Contract Documents.

1. The cost or credit for each alternate is the net addition to or deduction from the Contract Sum to incorporate alternate into the Work. No other adjustments are made to the Contract Sum.

1.3 PROCEDURES

A. Coordination: Modify or adjust affected adjacent work as necessary to completely integrate work of the alternate into Project.

1. Include as part of each alternate, miscellaneous devices, accessory objects, and similar items incidental to or required for a complete installation whether or not indicated as part of alternate.

B. Notification: Immediately following award of the Contract, notify each party involved, in writing, of the status of each alternate. Indicate if alternates have been accepted, rejected, or deferred for later consideration. Include a complete description of negotiated modifications to alternates.

C. Execute accepted alternates under the same conditions as other work of the Contract.

D. Schedule: A Schedule of Alternates is included at the end of this Section. Specification sections referenced in schedule contain requirements for materials necessary to achieve the work described under each alternate.

PART 2 - PRODUCTS (Not Used)

PART 3 - EXECUTION

3.1 SCHEDULE OF ALTERNATES

A. Alternate No. 1: Shall be a DEDUCT Alternate for the following work;

1. Remove existing base flashings and gravel-surfacing and provide overlay roof assembly as shown on the Drawings. Reference Section 024119 “Selective Structure Demolition” for removal of asbestos-containing materials. Contractor shall provide an Infrared Scan and/or test cuts as required by the manufacturer to determine condition of the existing roof assembly. Contractor shall carry 5 percent replacement of the existing roof assembly in Base Bid. All wood blocking, stud walls, plywood, wall panels, and sheet metal assemblies shall be provided as shown on the Drawings.

END OF SECTION 012300

SECTION 012600 - CONTRACT MODIFICATION PROCEDURES

PART 1 - GENERAL

1.1 SUMMARY

A. Section includes administrative and procedural requirements for handling and processing Contract Modifications.

B. Related Requirements:
   1. Section 012200 "Unit Prices" for administrative requirements for using unit prices.
   2. Section 016500 "Product Delivery Requirements" for administrative procedures for handling requests for substitutions made after the Contract award.

1.2 MINOR CHANGES IN THE WORK

A. Construction Manager will issue supplemental instructions authorizing Minor Changes in the Work, not involving adjustment to the Contract Sum or the Contract Period, as a Proposed Modification document generated by the Owner's software.

1.3 PROPOSAL REQUESTS

A. Proposed Modifications: Construction Manager will issue a detailed description of proposed changes in the Work prepared by the Architect that may require adjustment to the Contract Sum or the Contract Period. If necessary, the description will include supplemental or revised Drawings and Specifications.

   1. A Proposed Modification is not an instruction either to stop work in progress or to execute the proposed change.
   2. Within time specified in Proposed Modifications or, if time not specified, in twenty (20) Days after receipt of the Proposed Modification, Contractor shall submit a Proposed Change Order (PCO) indicating adjustments to the Contract Sum and/or the Contract Period, if any, the Contractor deems necessary to execute or resulting from the proposed change.
      a. Include a list of quantities of products required or eliminated and unit costs, with total amount of purchases and credits to be made. If requested, furnish survey data to substantiate quantities
      b. Indicate applicable taxes, delivery charges, equipment rental, and amounts of trade discounts.
      c. Include costs of labor and supervision directly attributable to the change.
      d. Include an updated Contractor's construction schedule that indicates the effect of the change, including, but not limited to, changes in activity duration, start and finish times, and activity relationship. Use available total float before requesting an extension of the Contract Period.
      e. Quotation Form: Use cover sheet generated by the Owner's software.

B. Contractor-Initiated modifications: If in the opinion of Contractor latent or changed conditions require modifications to the Contract, Contractor may initiate a claim by submitting a PCO designated on the face thereof as a Notice of claim.

1. Include a statement outlining reasons for the proposed change and the effect of the proposed change on the Work. Provide a complete description of the proposed change. Indicate the effect of the PCO on the Contract Sum and/or the Contract Period, if any.
2. Include a list of quantities of products required or eliminated and unit costs, with total amount of purchases and credits to be made. If requested, furnish survey data to substantiate quantities.
3. Indicate applicable taxes, delivery charges, equipment rental, and amounts of trade discounts.
4. Include costs of labor and supervision directly attributable to the proposed change.
5. Include an updated Contractor's construction schedule that indicates the effect of the proposed change, including, but not limited to, changes in activity duration, start and finish times, and activity relationship. Use available total float before requesting an extension of the Contract Period.
6. Comply with requirements in Section 01600 "Product Requirements" if the proposed change requires substitution of one product or system for product or system specified.
7. PCO Form: Use cover sheet generated by the Owner’s software.

1.4 ADMINISTRATIVE CHANGE ORDERS

A. Unit-Price Adjustment: See Section 012200 "Unit Prices" for administrative procedures for preparation of PCO for adjusting the Contract Sum to reflect measured scope of unit-price work.

1.5 CHANGE ORDER PROCEDURES

A. If Owner approves a PCO, Construction Manager will issue a Change Order for signatures of Owner and Contractor on document generated by the Owner’s software.

B. Once Change Order is fully executed by the Owner and Contractor it will be executed by the Owner’s Purchasing Agent acknowledging the Change Order modification, revised Contract Sum, if any, and current Contract Period.

C. The Contractor may not include costs for Change Order work on applications for payment until the Contractor is in receipt of a fully executed Change Order from the Owner’s Purchasing Agent.

1.6 WORK ORDER

A. Work Order: the Owner or Owner’s Representative may issue a Work Order generated by the Owner’s software. Work Order instructs Contractor to proceed with a change in the Work, for subsequent inclusion in a Change Order.

1. Work Order contains a complete description of change in the Work. It also designates method to be followed to determine change in the Contract Sum or the Contract Period, if any.

2. A Work Order shall be used in the absence of total agreement on the terms of a Change Order or when, in the Opinion of the Owner, the time needed to process a Change Order would adversely affect progress on the job.

3. Upon receipt of a Work Order the Contractor shall promptly proceed with the change in the Work involved and within 10 days from receipt of the Work Order, unless stated otherwise in the Work Order, and advise the Owner's Representative of the Contractor's agreement or disagreement with the method, if any, provided in the Work Order for determining the proposed adjustment in the Contract Sum and/or Contract Period. Within 30 days after notifying the Owner's Representative with the Contractor's position regarding the proposed adjustment of the Contract Sum and/or Contract Period, the Contractor shall provide a PCO to the Owner's Representative for Work required by the Work Order. The PCO shall be supported by all documentation and information required by subsection 1.3.B above.

4. Should the Contractor fail to submit the PCO within twenty-eight (28) days after the Work which is the subject thereof has been completed by the Contractor, any adjustment to the Contract Sum shall be established in one of the following methods in the sole discretion of the Owner:

   a. The additional compensation to the Contractor shall be the sum of the direct costs of the Contractor approved by the Owner. These direct costs may include all subcontractor costs but shall not include any Contractor Overhead and Profit.
   b. Costs of the Contractor established by using RS Means or a similar industry standard generated estimate
   c. Regardless of which of the foregoing alternatives is selected by Owner, Owner shall issue a Unilateral Change Order which shall be deemed full and final compensation to the Contractor for the changed Work.
   d. Owner may reject the PCO in its entirety if for any reason it determines that the subject Work has no impact on Contract Sum or Contract Period.

5. If the Contractor disagrees with the terms of a Work Order, Unilateral Change Order, or other written directive of the Owner regarding the Contractor's PCO, the Contractor shall continue with the disputed Work pursuant to the requirements of General Conditions, and such other provisions of the Contract Documents as may be applicable.

B. Documentation: Maintain detailed records on a time and material basis of work required by the Work Order.

1. After completion of changed Work, submit an itemized account and supporting data necessary to substantiate cost and time adjustments to the Contract, if any. Include the following information:

   a. Name of Owner's authorized agent who ordered the Work, and date of the order. Include copies of written authorization, when applicable.

b. Dates and times that Work was performed, and by whom, verified and signed by Owner's Field Representative.

c. Time record, summary of hours worked and hourly rates paid.

d. Receipts and invoices for the following:

1) Equipment used, listing dates and times of use.
2) Products used, including listing of quantities.
3) Subcontracts

1.7 OVERHEAD AND MARKUP FOR CONTRACT MODIFICATIONS

A. The combined overhead and profit shall not exceed the maximums indicated below. Not more than two percentages, not to exceed the maximum percentages shown below, will be allowed regardless of the number of tiers of subcontractors; that is, the markup on Work subcontracted by a subcontractor will be limited to one overhead and profit percentage in addition to the prime Contractor's commission percentage.

1. Commission: 10 percent to Contractor on Work performed by other than Contractor's own forces. This 10 percent shall apply to subcontractor direct costs only, not to the allowed subcontractor markups.

2. Overhead and Profit: 15 percent to Contractor and/or the Subcontractors for that portion of work performed by their own respective forces.

B. Overhead, as employed herein, is defined as and limited to the cost of the administration, field office, and home office costs, other required insurance, materials used in temporary structures (not including formwork), additional premiums on the performance bond of the Contractor, the use of small tools, scheduling costs, and all other costs incidental and non-direct to the performance of the change or the cost of doing business. The costs of additional contractor supervision, layout, coordination, or other related tasks are considered part of the commission percentage and no compensation will be given for those tasks. Small tools are defined as any tool with a replacement value of less than One Thousand Dollars ($1,000.00).

1.8 ESCALATION

A. There will be NO Change Order requests permitted or approved for cost increases caused by escalation of materials and/or labor over the duration of the Project.

PART 2 - PRODUCTS (Not Used)

PART 3 - EXECUTION (Not Used)

END OF SECTION 012600

SECTION 013300 - SUBMITTAL PROCEDURES

PART 1 - GENERAL

1.1 SUMMARY

A. This Section includes administrative and procedural requirements for submitting Shop Drawings, Product Data, Samples, and other submittals.

1.2 DEFINITIONS

A. Action Submittals: Written and graphic information that requires Architect's responsive action.

B. Informational Submittals: Written information that does not require Architect's responsive action. Submittals may be rejected for not complying with requirements.

1.3 SUBMITTAL PROCEDURES

A. Coordination: Coordinate preparation and processing of submittals with performance of construction activities.
   1. Coordinate each submittal with fabrication, purchasing, testing, delivery, other submittals, and related activities that require sequential activity.
   2. Coordinate transmittal of different types of submittals for related parts of the Work so processing will not be delayed because of need to review submittals concurrently for coordination.
      a. Architect reserves the right to withhold action on a submittal requiring coordination with other submittals until related submittals are received.

B. Processing Time: Allow enough time for submittal review, including time for resubmittals, as follows. Time for review shall commence on Architect's receipt of submittal. No extension of the Contract Time will be authorized because of failure to transmit submittals enough in advance of the Work to permit processing, including resubmittals.
   1. Initial Review: Allow 15 days for initial review of each submittal. Allow additional time if coordination with subsequent submittals is required. Architect will advise Contractor when a submittal being processed must be delayed for coordination.
   2. Intermediate Review: If intermediate submittal is necessary, process it in same manner as initial submittal.
   3. Resubmittal Review: Allow 15 days for review of each resubmittal.

C. Identification: Place a permanent label or title block on each submittal for identification.
   1. Indicate name of firm or entity that prepared each submittal on label or title block.
   2. Provide a space approximately 6 by 8-inches on label or beside title block to record Contractor's review and approval markings and action taken by Architect.

3. Include the following information on label for processing and recording action taken:
    a. Project name.
    b. Date.
    c. Name and address of Architect.
    d. Name and address of Contractor.
    e. Name and address of subcontractor.
    f. Name and address of supplier.
    g. Name of manufacturer.
    h. Submittal number or other unique identifier, including revision identifier.
        1) Submittal number shall use Specification Section number followed by a decimal point and then a sequential number (e.g., 061000.01). Resubmittals shall include an alphabetic suffix after another decimal point (e.g., 061000.01.A).
    i. Number and title of appropriate Specification Section.
    j. Drawing number and detail references, as appropriate.
    k. Location(s) where product is to be installed, as appropriate.
    l. Other necessary identification.

D. Deviations: Deviations from specifications are considered substitutions. Highlight, encircle, or otherwise specifically identify deviations from the Contract Documents on submittals as proposed substitutions. Further identify deviations by providing a written description for each deviation or variation from the contract documents.

E. Additional Copies: Unless additional copies are required for final submittal, and unless Architect observes noncompliance with provisions in the Contract Documents, initial submittal may serve as final submittal.

F. Transmittal: Package each submittal individually and appropriately for transmittal and handling. Transmit each submittal using a transmittal form. Architect will discard submittals received from sources other than Contractor.

G. Resubmittals: Make resubmittals in same form and number of copies as initial submittal.
    1. Note date and content of previous submittal.
    2. Note date and content of revision in label or title block and clearly indicate extent of revision.
    3. Resubmit submittals until they are marked "Approved or approved as noted."

H. Distribution: Furnish copies of final submittals to manufacturers, subcontractors, suppliers, fabricators, installers, authorities having jurisdiction, and others as necessary for performance of construction activities. Show distribution on transmittal forms.

I. Use for Construction: Use only final submittals with mark indicating "Approved or approved as noted" taken by Architect.

PART 2 - PRODUCTS

2.1 ACTION SUBMITTALS

A. General: Prepare and submit Action Submittals required by individual Specification Sections.

B. Product Data: Collect information into a single submittal for each element of construction and type of product or equipment.
   1. If information must be specially prepared for submittal because standard printed data are not suitable for use, submit as Shop Drawings, not as Product Data.
   2. Mark each copy of each submittal to show which products and options are applicable.
   3. Include the following information, as applicable:
      a. Manufacturer's written recommendations.
      b. Manufacturer's product specifications.
      c. Manufacturer's installation instructions.
      d. Manufacturer's catalog cuts.
      e. Compliance with specified referenced standards.
   4. Number of Copies: Submit four copies of Product Data, unless otherwise indicated. Architect will return two copies. Mark up and retain one returned copy as a Project Record Document.

C. Shop Drawings: Prepare Project-specific information, drawn accurately to scale. Do not base Shop Drawings on reproductions of the Contract Documents or standard printed data, unless submittal of Architect's CAD Drawings is otherwise permitted.
   1. Preparation: Fully illustrate requirements in the Contract Documents. Include the following information, as applicable:
      a. Dimensions.
      b. Identification of products.
      c. Fabrication and installation drawings.
      d. Roughing-in and setting diagrams.
      e. Shopwork manufacturing instructions.
      f. Templates and patterns.
      g. Schedules.
      h. Notation of coordination requirements.
      i. Notation of dimensions established by field measurement.
      j. Relationship to adjoining construction clearly indicated.
      k. Seal and signature of professional engineer if specified.
   2. Sheet Size: Except for templates, patterns, and similar full-size drawings, submit Shop Drawings on sheets at least 8-1/2 by 11-inches but no larger than 30 by 40-inches.
   3. Number of Copies: Submit two opaque (bond) copies of each submittal. Architect will return one copy.

D. Samples: Submit Samples for review of kind, color, pattern, and texture for a check of these characteristics with other elements and for a comparison of these characteristics between submittal and actual component as delivered and installed.

1. Transmit Samples that contain multiple, related components such as accessories together in one submittal package.
2. Identification: Attach label on unexposed side of Samples that includes the following:
   a. Generic description of Sample.
   b. Product name and name of manufacturer.
   c. Sample source.
   d. Number and title of appropriate Specification Section.
3. Disposition: Maintain sets of approved Samples at Project site, available for quality-control comparisons throughout the course of construction activity. Sample sets may be used to determine final acceptance of construction associated with each set.
4. Samples for Initial Selection: Submit manufacturer's color charts consisting of units or sections of units showing the full range of colors, textures, and patterns available.
   a. Number of Samples: Submit one full set of available choices where color, pattern, texture, or similar characteristics are required to be selected from manufacturer's product line. Architect will return submittal with options selected.
5. Samples for Verification: Submit full-size units or Samples of size indicated, prepared from same material to be used for the Work, cured and finished in manner specified, and physically identical with material or product proposed for use, and that show full range of color and texture variations expected. Samples include, but are not limited to, the following: partial sections of manufactured or fabricated components; small cuts or containers of materials; complete units of repetitively used materials; swatches showing color, texture, and pattern; color range sets; and components used for independent testing and inspection.
   a. Number of Samples: Submit three sets of Samples. Architect will retain two Sample sets; remainder will be returned.

E. Product Schedule or List: As required in individual Specification Sections, prepare a written summary indicating types of products required for the Work and their intended location.

1. Number of Copies: Submit one copy of product schedule or list, unless otherwise indicated. Architect will return one copy.

F. Construction Schedule: Construction schedule showing sequence and duration of activities.

G. Schedule of Values: Itemize separately labor and materials for each technical section within the Specification as they will be shown on the Application for Payment (use AIA form G703).

H. Subcontract List: Prepare a written summary identifying individuals or firms proposed for each portion of the Work, including those who are to furnish products or equipment fabricated to a special design.

1. Number of Copies: Submit three copies of subcontractor list, unless otherwise indicated. Architect will return one copy.

2.2 INFORMATIONAL SUBMITTALS

A. General: Prepare and submit Informational Submittals required by other Specification Sections.

1. Number of Copies: Submit two copies of each submittal, unless otherwise indicated. Architect will not return copies.
2. Certificates and Certifications: Provide a notarized statement that includes signature of entity responsible for preparing certification. Certificates and certifications shall be signed by an officer or other individual authorized to sign documents on behalf of that entity.

B. Qualification Data: Prepare written information that demonstrates capabilities and experience of firm or person. Include lists of completed projects with project names and addresses, names and addresses of architects and owners, and other information specified.

C. Welding Certificates: Prepare written certification that welding procedures and personnel comply with requirements in the Contract Documents. Submit record of Welding Procedure Specification (WPS) and Procedure Qualification Record (PQR) on AWS forms. Include names of firms and personnel certified.

D. Installer Certificates: Prepare written statements on manufacturer's letterhead certifying that Installer complies with requirements in the Contract Documents and, where required, is authorized by manufacturer for this specific Project.

E. Manufacturer Certificates: Prepare written statements on manufacturer's letterhead certifying that manufacturer complies with requirements in the Contract Documents. Include evidence of manufacturing experience where required.

F. Product Certificates: Prepare written statements on manufacturer's letterhead certifying that product complies with requirements in the Contract Documents.

G. Material Certificates: Prepare written statements on manufacturer's letterhead certifying that material complies with requirements in the Contract Documents.

H. Material Test Reports: Prepare reports written by a qualified testing agency, on testing agency's standard form, indicating and interpreting test results of material for compliance with requirements in the Contract Documents.

I. Product Test Reports: Prepare written reports indicating current product produced by manufacturer complies with requirements in the Contract Documents. Base reports on evaluation of tests performed by manufacturer and witnessed by a qualified testing agency, or on comprehensive tests performed by a qualified testing agency.

J. Manufacturer's Instructions: Prepare written or published information that documents manufacturer's recommendations, guidelines, and procedures for installing or operating a product or equipment. Include name of product and name, address, and telephone number of manufacturer.

K. Manufacturer's Field Reports: Prepare written information documenting factory-authorized service representative's tests and inspections. Include the following, as applicable:

1. Statement on condition of substrates and their acceptability for installation of product.

2. Summary of installation procedures being followed, whether they comply with requirements and, if not, what corrective action was taken.
3. Results of operational and other tests and a statement of whether observed performance complies with requirements.

L. Insurance Certificates and Bonds: Prepare written information indicating current status of insurance or bonding coverage. Include name of entity covered by insurance or bond, limits of coverage, amounts of deductibles, if any, and term of the coverage.

M. Safety Data Sheets (SDSs): Submit information directly to Owner; do not submit to Architect.
1. Architect will not review submittals that include SDSs and will return them for resubmittal.

PART 3 - EXECUTION

3.1 CONTRACTOR'S REVIEW

A. Review each submittal and check for coordination with other Work of the Contract and for compliance with the Contract Documents. Note corrections and field dimensions. Mark with approval stamp before submitting to Architect.

B. Approval Stamp: Stamp each submittal with a uniform, approval stamp. Include Project name and location, submittal number, Specification Section title and number, name of reviewer, date of Contractor's approval, and statement certifying that submittal has been reviewed, checked, and approved for compliance with the Contract Documents.

3.2 ARCHITECT'S ACTION

A. General: Architect will not review submittals that do not bear Contractor's approval stamp and will return them without action.

B. Action Submittals: Architect will review each submittal, make marks to indicate corrections or modifications required, and return it. Architect will stamp each submittal with an action stamp and will mark stamp appropriately to indicate action taken.

C. Informational Submittals: Architect will review each submittal and will not return it, or will return it if it does not comply with requirements. Architect will forward each submittal to appropriate party.

D. Partial submittals are not acceptable, will be considered nonresponsive, and will be returned without review.

E. Submittals not required by the Contract Documents may not be reviewed and may be discarded.

END OF SECTION 013300

SECTION 015000 - TEMPORARY FACILITIES AND CONTROLS

PART 1 - GENERAL

1.1 SUMMARY

A. This Section includes requirements for the provision and utilization of temporary facilities to protect the Owner's property, the site, and construction materials, and for daily maintenance and cleanup of the site during the project.

1.2 CONTRACTOR'S USE OF EXISTING FACILITIES

A. Limit use of the premises to the work indicated, so as to allow for the Owner's uninterrupted occupancy and use. Confine operations to the areas indicated under the Contract. Conformance to the regulations set forth by the Owner regarding use of existing facilities is mandatory.

B. Sanitary facilities shall be provided by the Contractor. Use of the building's sanitary facilities is not permitted.

C. Owner will assist in controlling occupancy. Contractor shall provide and place portable barricades, as coordinated with the Owner, under work areas inside the building.

D. Clean interior and exterior areas affected by the construction on a daily basis. Do not allow construction debris, waste materials, tools, excess packaging materials or other construction related materials to accumulate on the roof, in the facility, or on the exterior grounds and pavements.

E. See Division 01 Section "Product Delivery Requirements" for product storage facilities and requirements.

1.3 UTILITIES

A. Electrical service will be provided to the Contractor free of charge by the Owner through exterior electrical outlets if available and operable. Use shall be limited to construction hours. The Owner reserves the right to charge the Contractor for excessive electrical service usage (i.e., wasteful usage). Should charges be considered, the Owner will notify the Contractor in writing of his intent, 48 hours in advance.

B. Water for construction purposes will be provided to the Contractor free of charge by the Owner through exterior water spigots if operable. The Owner reserves the right to charge the Contractor for excessive or wasteful use. Should charges be considered, the Owner will notify the Contractor in writing of his intent, 48 hours in advance. Drinking water shall be provided by the Contractor.

C. All other utilities required will be provided by the Contractor.

D. Plumbing, heating, and electrical work, including reinstallation of equipment and other work to be performed by the Contractor, shall be carried out without interference to the building's normal operation. Where work requires interruption of service, the Contractor shall make advance arrangements with the Owner for dealing with such interruption.

E. Ensure proper and safe operation and maintenance of utility systems within the construction limits, whether these are supplied by the Owner's distribution system or otherwise, until the work is accepted by the Owner. Maintain and operate appurtenances within the construction area that serve the distribution system, subject to periodic inspection by the Owner's operating personnel. Inspection by any representative or personnel of the Owner shall not relieve the Contractor of his responsibilities in connection with operation and maintenance of these facilities and equipment.

1.4 ACCESS

A. Provide stair tower, ladders, scaffolding and staging as required to access the project area(s) in accordance with OSHA and local guidelines. Access to adjacent roof areas will be prohibited. Access to the interior will be limited. Should damage to the building occur, restore damaged areas to their original condition, clean up debris, and provide other access to the roof for the duration of the project.

B. Site access will be as designated in the Drawings.

C. Do not interfere with normal building operations. Coordinate activities with the Owner and building occupants.

1.5 BARRIERS

A. Install temporary fencing, warning lines, screens, barriers and guards, as required, to segregate the construction areas from adjacent operational facilities, occupants and the public. In the event that access cannot be interrupted in the construction area, provide protection above doorways and walks in the construction area. Provide guard lights on barriers and lighting as necessary to prevent vandalism of work and storage areas. The Owner is not responsible for Contractor's losses due to damage or theft by vandals.

B. Install protective coverings at paving and building walls adjacent to hoist prior to starting work. Lap protective coverings at least 1-foot, secure against wind, and vent to prevent condensation of moisture on covered surfaces. Maintain the protective coverings in place for the duration of the project. Cover windows adjacent to Contractor operation areas with plywood.

C. Provide protection to paved and landscaped surfaces for the duration of the project. Surfaces damaged as a result of the Contractor’s staging or access shall be restored to its original condition prior to the start of construction.

D. Maintain one lane on access road for vehicular and pedestrian traffic.

1.6 TEMPORARY PROTECTION

A. Provide suitable Owner approved temporary protection to prevent the entrance of debris and obstructions into the building. Provide warning signs to reroute personnel around areas of dangerous work. Place warning barriers at roof perimeters and at deck openings. Clearly label temporary covers over deck openings. Do not permit openings to remain unprotected overnight. Schedule operations to allow for completion of new roofing over a predetermined area of roof within a day's work. Use special care to avoid damaging roofing and flashing when working on the roof of the building.

B. Provide temporary tie-ins between existing and new roof systems as specified and detailed. Tie-in construction shall completely prevent interior leaks, migration of moisture from existing to new construction, and damage of any type to the facility. Provide necessary quality control at tie-ins on a daily basis to prevent leaks.

C. Avoid traffic on completed roof areas. Coordinate work to prevent this situation. Should temporary access be required, provide temporary substrate protection for trafficked areas.

D. Protect drainage systems from debris accumulation during construction. Ensure roof drains and leader pipes are not restricted when Contractor is not on site.

E. Protect materials scheduled to be reused from damage by placing them in labeled containers or wrappings stored in a weathertight trailer.

F. Provide temporary protection such as plywood and tarps for streets, drives, curbs, sidewalks, landscaping, and existing exterior improvements during all phases of the project.

1.7 ROOFTOP PROTECTION

A. Provide plywood walkways, with 1/2-inch thick rubber walkway pad or 1-inch thick high density insulation protection beneath, for protection of new or existing roof areas which must be trafficked, and for roof membrane protection below demolition work that occurs above new or existing roof areas.

1.8 DEBRIS REMOVAL

A. The Owner shall designate crane and refuse container locations. These areas shall be sectioned off with proper warning lines.

B. Removed materials shall not be thrown freely from the roof but shall be lowered to the ground by crane in suitable containers or in an enclosed chute, in order to reduce the spread of dust and other debris.

C. Supply adequate covered receptacles for waste, debris and rubbish. One receptacle will be allowed on site at a time, and must be immediately removed from the site when full. Clean the project area daily and prior to moving the receptacle to another location on the site. Locations shall be as permitted by the Owner. Disposal shall be off-site in a legal dump authorized to accept construction demolition solid wastes.

1.9 WEATHER PROTECTION

A. Weather protection includes temporary protection of components adversely affected by moisture, wind, heat, and cold by covering, patching, sealing, enclosing, ventilating, cooling, and/or heating. Provide protection for locations within the project area as necessary, to protect the building and its contents, trafficked adjacent areas, new construction materials and accessories. The cost of heat, fuel and power necessary for proper weather protection shall be the responsibility of the Contractor. Installed weather protection shall comply with safety regulations and provisions for adequate ventilation and fire protection.

1.10 VOLATILE MATERIALS

A. The Contractor is reminded that adhesives, solvents, bitumens, etc., are highly volatile and flammable materials. These materials, along with tools, applicators, and rags, shall not be stored on or within the building. No overnight storage on the roof will be allowed. Do not transport materials through the building. Take precautions and closely follow the specification requirements for fire protection on site during construction.

B. Locate and use flame-heated equipment so as not to endanger the structure, other materials on site, or adjacent property. Do not place flame-heated equipment on the roof. Locate and use flame-heated equipment in specific areas approved by the Owner. Do not relocate flame-heated equipment without prior approval from the Owner.

C. The use of flame-heated equipment or torches on the roof is prohibited unless specifically approved in writing by the Owner.

1.11 FIRE PROTECTION

A. Provide necessary temporary fire protection for the building, its contents and materials during construction. Do not store combustibles inside the building or on the roof. Store adhesives, caulks, and cleaning solvents away from the building using a method approved by local fire officials. Should cutting, burning, or welding be necessary, provide a fire watch during operations and for four hours minimum after completion of the operations.

B. Do not use open flames near adhesives, caulks, or cleaning solvents as they will readily ignite. Rags soaked with cleaning solvent shall not be discarded in the dumpsters, but shall be stored in a separate metal receptacle and removed from the site daily.

C. Comply with local fire codes and obtain permits necessary from the local fire department. Provide a copy to the Owner. Provide recently tested, fully charged fire extinguishers around the storage area, rubbish receptacle and two fire extinguishers on the roof within 50 feet of the Work.

1.12 INTERIOR PROTECTION AND RESTORATION

A. Protect and cover fixed items, furniture, equipment, appliances, fixtures, bookcases, etc. within the building below the work areas.

B. At the Owner's direction, remove portable furniture, equipment, appliances, fixtures, materials, stock, etc. within the building below the work area to an adjacent area for protection.

C. Remove, temporarily support, suspend and protect existing items requiring removal during the installation of the new work and properly replace these items to their original condition and to the Owner's satisfaction. These items include but are not limited to suspended ceilings, lighting fixtures, heating and air handling ductwork, electrical conduit, etc.

D. Contractor shall designate one (1) crew member to monitor the interior protection and to maintain barricades inside the Gymnasium.

1.13 CLEAN-UP

A. Clean and restore interior building spaces beneath the work areas to original condition prior to the construction.

B. Debris, dust and dirt shall be swept completely clean at the joists, beams, overhead accessories and similar items. Those items soiled or stained from the work shall be cleaned and refinished.

C. Electrical fixtures damaged by the construction shall be replaced with an equal in shape, color, manufacturer, and capacity at no added expense to the Owner.

D. Interior ceiling finishes which are damaged by the construction shall be repaired or replaced with a system equal in color, texture, and finish at no added expense to the Owner.

E. Floors shall be swept and vacuumed completely clean of dust, dirt, and debris. The Owner will wash and rewax floors, but only as part of a normal or routine maintenance procedure. Heavily soiled, stained, or damaged floor areas will be cleaned, repaired, and/or replaced by the Contractor at no additional cost to the Owner.

F. Open ducts, grills, thermostats, electric boxes, or similar fixtures and items which can be soiled or affected by the work or which might conduct dust to other areas shall be masked, protected, and cleaned by the Contractor.

G. Windows, blinds, curtains, shelving, edges, lighting, etc. shall be cleaned to their original condition prior to the start of the roof renovation, and to the satisfaction of the Owner.

H. Remove completely temporary protection materials and facilities from the site upon completion of the work and demobilization of the project.

I. Restore streets, drives, curbs, sidewalks, landscaping, and existing improvements disturbed by the construction operations to their condition at the start of the work.

1.14 NOTIFICATION

A. Notify the Owner's Representative at least 72 hours in advance of the desire to extend, connect, disconnect, turn on or off HVAC, steam, electric, water or other service from the Owner's supply systems. The actual operation shall be witnessed by authorized representatives of the Owner.

Plumbing, heating and electrical work, including installation of equipment and any other work to be performed by the Contractor, shall be carried out without interference with the Owner's normal operation. Where work requires interruption of a service, make advance arrangements with the Owner for dealing with such interruption.

1.15 VEHICLES

A. Acceptable areas for the locations of the Contractor's vehicles shall be as designated by the Owner. No other areas may be utilized without the Owner's permission.

1.16 WALKWAY COVERING

A. Install walkway coverings where designated on the drawings or above entrances which must remain accessible. The framework supporting the walkway covering shall be free-standing and well braced. The roof covering and support framing shall be designed to support a live load of at least 150 psf. The roof coverings shall be of width sufficient to cover the entire walkway or sidewalk. A minimum height clearance of 6-feet 8-inches, or as required to allow building doors to open, shall be maintained below coverings. Should coverings obscure the building's address, a temporary address shall be installed so as to be visible from the street. Lettering shall be approved by the Owner. Protection shall be in accordance with all applicable OSHA standards.

1.17 SAFETY VESTS

A. All personnel must wear high visibility vests Class 2/lime at all times while on school property.

1.18 EMERGENCY LEAK RESPONSE

A. Provide the following: One operable wet/dry shop vacuums with a minimum capacity of 10 gallon, one operable submersible sump pump with a discharge rate of at least 1.2000 gallons per hour and capable of removing water to a depth of ¼", four heavy duty mops with five gallon rinse buckets, 400 feet of OSHA/UL type industrial indoor/outdoor extension cords rated at least 13 amps at 125v, two hundred feet of 3/4-inch water hose with all necessary fittings to hook to sump pumps, name and numbers of at least two individuals who could be reached 24 hours a day, seven days a week to respond to leaks.

PART 2 - PRODUCTS

2.1 MATERIALS

A. Portable Chain-Link (Site Enclosure) Fencing: Minimum 2-inch, 9-gage, galvanized steel, chain-link fabric fencing; minimum 8-feet high with galvanized steel pipe posts; minimum 2-3/8-inch OD line posts and 2-7/8-inch OD corner and pull posts, with 1-5/8-inch OD top and bottom rails. Provide concrete bases for supporting posts.

B. Lumber and Plywood: Unless noted otherwise, comply with requirements in Division 06 Section "Rough Carpentry."

2.2 TEMPORARY FACILITIES

A. General: Maintain all temporary facilities and controls necessary for the performance of the Work. Comply with all applicable codes and regulations of authorities having jurisdiction; obtain permits as required. Locate and install all facilities and controls where acceptable to the local authorities having jurisdiction, utility, and Owner and remove same and terminate, in a manner suitable to the utility owner, at completion of the Work or when otherwise directed. Pay all costs associated with the provision and maintenance of temporary facilities and controls including power, water, and fuel (if any) consumed until Substantial Completion.

B. Storage and Staging Areas: The Contractor shall be responsible for coordination, protection, and safekeeping of products stored on site under this Contract, including soil cut and fill. Refer to Contract Documents for any defined staging areas.

1. Move stored products that interfere with construction of the Work, or operations of the Owner, or separate contractors.
2. Obtain any pay for use of additional storage or staging areas as needed for the Work.
3. Provide storage areas sized to storage requirements for products of individual Sections, allowing for access and orderly maintenance and inspection of products.

2.3 EQUIPMENT

A. Fire Extinguishers: Portable, UL rated; with class and extinguishing agent as required by locations and classes of fire exposures.

B. Heating Equipment: Unless Owner authorizes use of permanent heating system, provide UL Listed or FM approved vented, self-contained, liquid-propane-gas or fuel-oil heaters with individual space thermostatic control.

1. Use of gasoline-burning space heaters, open-flame heaters, or salamander-type heating units is prohibited.
2. Heating Units: Listed and labeled for type of fuel being consumed, by a testing agency acceptable to authorities having jurisdiction, and marked for intended use.

PART 3 - EXECUTION (Not Used)

END OF SECTION 015000

SECTION 016500 - PRODUCT DELIVERY REQUIREMENTS

PART 1 - GENERAL

1.1 SUMMARY

A. This Section contains instructions and requirements for the provision and maintenance of adequate delivery, storage, and handling on site of products and materials to be utilized in the Work.

1.2 PRODUCT DELIVERY, STORAGE, AND HANDLING

A. Deliver, store, and handle products using means and methods that will prevent damage, deterioration, and loss, including theft. Comply with manufacturer's written instructions.

B. Delivery and Handling:
   1. Schedule delivery to minimize long-term storage at Project site and to prevent overcrowding of construction spaces.
   2. Coordinate delivery with installation time to ensure minimum holding time for items that are flammable, hazardous, easily damaged, or sensitive to deterioration, theft, and other losses.
   3. Deliver products to Project site in an undamaged condition in manufacturer's original sealed container or other packaging system, complete with labels and instructions for handling, storing, unpacking, protecting, and installing.
   4. Inspect products on delivery to ensure compliance with the Contract Documents and to ensure that products are undamaged and properly protected.

C. Storage:
   1. Store products to allow for inspection and measurement of quantity or counting of units.
   2. Store materials in a manner that will not endanger Project structure.
   3. Store products that are subject to damage by the elements under cover in a weathertight enclosure above ground, with ventilation adequate to prevent condensation.
   4. Store cementitious products and materials on elevated platforms.
   5. Store foam plastic from exposure to sunlight, except to extent necessary for period of installation and concealment.
   6. Comply with product manufacturer's written instructions for temperature, humidity, ventilation, and weather-protection requirements for storage.
   7. Protect stored products from damage and liquids from freezing.

D. Deliver materials in sufficient quantity to allow continuity of work. Deliver materials to the site in original sealed containers bearing manufacturer's name and brand designation. Where materials are designated by a referenced specification, containers or packages shall bear specification

number, type, and class as applicable. Do not deliver materials that are not approved for use. Remove such materials from the site immediately.

E. Store roofing materials on site in areas designated by the Owner. Materials are to be stored in box trailers or in elevated piles completely wrapped in waterproof tarps. Tilt stock piles for effective drainage and utilize tie-downs to protect tarps against wind blow-offs. Store flammable materials such as adhesives in storage containers suitable for flammable substances. Mark materials that are exposed to the elements for removal from site. Do not incorporate defective or rejected materials in the Work.

F. Handle materials with equipment selected and operated so as not to damage the materials or the roofing. Handle roll materials in a manner to prevent damage to the edges or ends. Seal containers when their contents are not being used to prevent premature curing or damage to materials. Damaged or improperly stored materials shall be marked and removed from the site immediately.

G. No more materials shall be stored on the roof than can be installed in one day. Distribute materials brought to the roof so that the uniform load shall be less than 20 PSF. Evenly distribute materials for daily operations to prevent concentrated loads. The weight of workmen, equipment, and materials shall not exceed the capacity of the structure.

H. Misshapen, oval, creased, and/or damaged roll goods shall not be used in the new roof system. The Contractor shall handle and store roll materials to prevent such conditions. The Contractor shall also ensure that roll goods accepted from the manufacturer are in good condition. The Owner will not be responsible for, nor accept, roll goods that are defective.

1.3 TOOLS AND EQUIPMENT

A. Contractor is responsible for delivery, storage, maintenance, and security of tools and equipment.

1.4 INSPECTION AND NOTIFICATION

A. Materials stored on site and subject to damage from wind, precipitation, hail, or other potential climactic conditions will be subject to inspection on a daily basis by the Owner or Owner’s Representative. Absorptive materials such as lumber, insulation and felts will be tested periodically for moisture content.

B. Upon notification by the Owner or Owner’s Representative of insufficient protection of or damage to materials on site, the Contractor shall, within 24 hours, properly restore protection and replace or repair damaged materials and systems. Should the Contractor not accomplish immediate repair or replacement when notified, the Owner shall have the proper protection installed at the Contractor's expense.

1.5 MANUFACTURER’S INFORMATION

A. Submit the roofing system materials manufacturer's written instructions concerning storage and handling of materials, including adhesives, cements, sealants, and accessories. Provide the following information:

1. Manufacturer’s "shelf-life" of materials, including the date of manufacture of perishables such as volatiles, caulking, and mastics.
2. Acceptable latent moisture content for absorptive materials such as lumber, insulation, and felts.
3. Manufacturer's requirements for storage facilities concerning temperature, humidity, and ventilation.

B. Provide and maintain on site manufacturer's information concerning storage and handling of flammable or volatile materials, such as Safety Data Sheets, for the duration of the project.

C. Provide and maintain on-site expiration dates of all coatings, mastics, and caulking.

D. Comply with the manufacturer’s recommendations and these Specifications for on-site storage of materials.

PART 2 - PRODUCTS (Not Used)

PART 3 - EXECUTION (Not Used)

END OF SECTION 016500

SECTION 017700 - CLOSEOUT PROCEDURES

PART 1 - GENERAL

1.1 SUMMARY

A. This Section includes administrative and procedural requirements for contract closeout.

1.2 SUBSTANTIAL COMPLETION

A. Preliminary Procedures: Before requesting inspection for determining date of Substantial Completion, complete the following. List items below that are incomplete in request.
   1. Prepare a list of items to be completed and corrected (punch list), the value of items on the list, and reasons why the Work is not complete.
   2. Submit specific warranties, workmanship bonds, maintenance service agreements, final certifications, and similar documents.
   3. Obtain and submit releases permitting Owner unrestricted use of the Work and access to services and utilities. Include occupancy permits, operating certificates, and similar releases.
   4. Deliver tools, spare parts, extra materials, and similar items to location designated by Owner. Label with manufacturer's name and model number where applicable.
   5. Terminate and remove temporary facilities from Project site, along with mockups, construction tools, and similar elements.
   6. Touch up and otherwise repair and restore marred exposed finishes to eliminate visual defects.
   7. Submit certificate of manufacturer's inspection.

B. Inspection: Submit a written request for inspection for Substantial Completion. On receipt of request, Architect will either proceed with inspection or notify Contractor of unfulfilled requirements. Architect will prepare the Certificate of Substantial Completion after inspection or will notify Contractor of items, either on Contractor's list or additional items identified by Architect, that must be completed or corrected before certificate will be issued.
   1. Reinspection: Request reinspection when the Work identified in previous inspections as incomplete is completed or corrected.
   2. Results of completed inspection will form the basis of requirements for Final Completion.

1.3 FINAL COMPLETION

A. Preliminary Procedures: Before requesting final inspection for determining date of Final Completion, complete the following:
   1. Submit a final Application for Payment.

2. Submit certified copy of Architect's Substantial Completion inspection list of items to be completed or corrected (punch list), endorsed and dated by Architect. The certified copy of the list shall state that each item has been completed or otherwise resolved for acceptance.

B. Inspection: Submit a written request for final inspection for acceptance. On receipt of request, Architect will either proceed with inspection or notify Contractor of unfulfilled requirements. Architect will prepare a final Certificate for Payment after inspection or will notify Contractor of construction that must be completed or corrected before certificate will be issued.

1. Reinspection: Request reinspection when the Work identified in previous inspections as incomplete is completed or corrected.

1.4 LIST OF INCOMPLETE ITEMS (PUNCH LIST)

A. Preparation: Submit three copies of list. Include name and identification of each space and area affected by construction operations for incomplete items and items needing correction including, if necessary, areas disturbed by Contractor that are outside the limits of construction.

1.5 CORE SAMPLES

A. The Owner reserves the right to have core sampling performed by the Contractor where moisture contamination is suspected within the new roof system until the expiration of the Contractor's warranty. Core sample locations shall be chosen by the Owner and be performed at no cost to the Owner.

1.6 WARRANTIES

A. Submittal Time: Submit manufacturer's warranties and contractor's guarantees on request of Architect for designated portions of the Work where commencement of warranties other than date of Substantial Completion is indicated.

1.7 PROJECT CLOSEOUT SUBMITTALS

A. When both the Owner or Owner's Representative and the Manufacturer's Representative agree that the Contractor has performed according to the Specifications and has installed the materials to the satisfaction of the Manufacturer, submit the following:

1. Specified Contractor's and Manufacturer's Warranties and Guarantees.
2. Lien Releases from Contractor, subcontractor, and suppliers (AIA Forms G706, G706A).
3. Consent of Surety to Final Payment (AIA Form G707).

B. Operation and Maintenance Data

1. Provide data for waterproofing system.
2. Submit five sets prior to final inspection, bound in 8.5 x 11-inch three-ring side binders with durable plastic covers.

3. Each booklet shall be bound in a three-ring loose-leaf binder titled, “Record Information Booklet for (project name)”. Sheets 8.5 x 11-inches shall be used except some sheets may be folded and used as pullouts.
4. Make-up of the booklet:
    a. Part 1: Directory, listing names, addresses, and telephone numbers of Engineer and Contractor.
    b. Part 2: Maintenance instruction, arranged by system. For each system, give names, addresses, and telephone numbers of subcontractors and suppliers.
        1) List:
            a) Appropriate design criteria.
            b) Maintenance instructions, equipment.
            c) Shop drawings and product data.
            d) Warranties.
    c. Part 3: Material and equipment descriptions shall include model or type names or numbers, color, and other information required for future reordering.
    d. Part 4: Maintenance, parts, installation, and operations manuals, as well as guarantees.
    e. Part 5: All manufacturer’s inspection reports from duration of project.

PART 2 - PRODUCTS

2.1 MATERIALS

A. Cleaning Agents: Use cleaning materials and agents recommended by manufacturer or fabricator of the surface to be cleaned. Do not use cleaning agents that are potentially hazardous to health or property or that might damage finished surfaces.

PART 3 - EXECUTION

3.1 FINAL CLEANING

A. General: Provide final cleaning. Conduct cleaning and waste-removal operations to comply with local laws and ordinances and Federal and local environmental and antipollution regulations.

B. Comply with safety standards for cleaning. Do not burn waste materials. Do not bury debris or excess materials on Owner's property. Do not discharge volatile, harmful, or dangerous materials into drainage systems. Remove waste materials from Project site and dispose of lawfully.

END OF SECTION 017700

SECTION 024119 - SELECTIVE STRUCTURE DEMOLITION

PART 1 - GENERAL

1.1 SUMMARY

A. This Section specifies requirements for the following Scope of Work:
   1. Removal of existing roofing and related materials.

1.2 DEFINITIONS

A. Remove: Detach items from existing construction and legally dispose of them off-site, unless indicated to be removed and salvaged or removed and reinstalled.

B. Remove and Reinstall: Detach items from existing construction, prepare them for reuse, and reinstall them where indicated.

C. Existing to Remain: Existing items of construction that are not to be removed and that are not otherwise indicated to be removed, removed and salvaged, or removed and reinstalled.

1.3 SUBMITTALS

A. Schedule of Selective Demolition Activities: Indicate detailed sequence of selective demolition and removal work, with starting and ending dates for each activity, interruption of utility services, and locations of temporary set up areas.

B. Pre-demolition Videotapes: Show existing conditions of adjoining construction and site improvements, including finish surfaces, that might be misconstrued as damage caused by selective demolition operations. Submit before Work begins.

C. Landfill Records: Indicate receipt and acceptance of hazardous wastes by a landfill facility licensed to accept hazardous wastes.

D. Proposed locations of chutes, dumpsters, cranes, hoists, and other temporary equipment or facilities required for demolition work.

E. Proposed methods for interior and exterior protection and clean-up during removal and re-roofing operations.

F. Provide schedule, updated weekly, indicating areas of roof where demolition will occur. Notify Owner of schedule changes.

G. Hazardous materials remediation plan signed by a certified Industrial Hygienist.

1.4 QUALITY ASSURANCE

A. Demolition Firm Qualifications: An experienced firm that has specialized in demolition work similar in material and extent to that indicated for this Project.

B. Refrigerant Recovery Technician Qualifications: Certified by an EPA-approved certification program.

C. Regulatory Requirements: Comply with governing EPA notification regulations before beginning selective demolition. Comply with hauling and disposal regulations of authorities having jurisdiction.

D. Standards: Comply with ANSI A10.6 and NFPA 241; OSHA, 29 CFR 1926.1101; EPA, NESHAP 40 CFR, Part 60.

E. Comply with Federal State and Local requirements.

1.5 PROJECT CONDITIONS

A. Owner will occupy portions of building immediately below and adjacent to selective demolition area. Conduct selective demolition so Owner's operations will not be disrupted.

B. Notify Architect of discrepancies between existing conditions and Drawings before proceeding with selective demolition.

C. Hazardous Materials: Hazardous materials are present in construction to be selectively demolished. Independent testing indicated the flashings contain asbestos.

1. Do not disturb hazardous materials except as directed under the hazardous materials abatement plan. The plan shall be prepared, signed, and sealed by a certified industrial hygienist. The remediation plan shall conform to the following minimum criteria:

    a. Provide a detailed job-specific plan of the work procedures to be used in the disturbance of hazardous materials. The plan shall include location and extent of the removal area, critical barriers, physical boundaries, location and details of decontamination facilities, viewing ports, and mechanical ventilation systems. Include a description of the personal protective equipment required, specific work practices, controls and job responsibilities for individuals. Include in the plan, interface of trades, sequencing of related work, collected debris, air sampling and a detailed description of the method of containment of the operation to ensure that hazardous materials are not released outside of the control areas. Include site preparation, cleanup and clearance procedures. Include occupational and environmental sampling, training and strategy, sampling and analysis strategy and methodology, frequency of sampling, duration of sampling, and qualifications of sampling personnel in the air sampling portion of the plan. Include a description of arrangements made among contractors on multi-contractor worksites to inform affected employees and to clarify responsibilities to control exposures. The plan shall also include an occupant protection program that describes the measures that will be taken during the work to notify and protect the building occupants.

2. All workers shall have training certifications in the removal or supervision of the removal of the hazardous materials in question.
3. Do not disturb hazardous materials or items suspected of containing hazardous materials except under procedures specified in the approved remediation plan.
4. Contractor is responsible for protection from damage and/or contamination of the adjacent areas. Where existing work is damaged or contaminated restore work to its original condition or better as determined by the owner.
   Third party air and surface monitoring and testing shall be provided by the contractor as required by federal and state regulations and shall be accounted for in the remediation plan. This shall include at least 2 personal monitors, 1 monitor at the abatement area perimeter (roof level) and 1 monitor at the closest egress to the work area.

D. Storage or sale of removed items or materials on-site is not permitted.

E. Utility Service: Maintain existing utilities indicated to remain in service and protect them against damage during selective demolition operations.
   1. Maintain fire-protection facilities in service during selective demolition operations.

1.6 WARRANTY

A. Existing Warranties: Remove, replace, patch, and repair materials and surfaces cut or damaged during selective demolition, by methods and with materials so as not to void existing warranties.

1.7 DEMOLITION AND TRANSPORT

A. Conveyances: Buggies or wheelbarrows used on roofs to transport removed debris to chutes or crane apparatus location shall be of size and design to prevent damage to deck and structure.

B. Chutes: Provide enclosed chutes for debris transfer from roof areas at height of 10-feet or more. Do not allow debris to spill from bottom of chute directly onto ground. Direct chutes into approved construction debris container (dumpster). Control and contain dust and noise from falling debris by use of breaks in vertical alignment of chute or tarps covering dumpster. Provide hose with nozzle near chute outlet to wet debris, as necessary, for dust control.

C. Hoists/Cranes: Provide hoists or cranes to remove debris and transport materials to and from roof. Secure materials to prevent loss during lifting. Place debris transported from roof directly in approved construction debris containers. Provide proper protection of wall areas for entire height directly adjacent to or under area of hoisting.

D. Use of “bobcat” type removal equipment on roof is prohibited.

E. Mechanical cutting equipment: Roof cutting equipment shall be equipped with operable blade depth setting mechanisms to control cutting depth of blade and prevent damage to structural deck during cutting operations.

PART 2 - PRODUCTS (Not Used)

PART 3 - EXECUTION

3.1 EXAMINATION

A. Survey existing conditions and correlate with requirements indicated to determine extent of selective demolition required.

B. Inventory and record the condition of items to be removed and reinstalled and items to be removed and salvaged.

C. When unanticipated mechanical, electrical, or structural elements that conflict with intended function or design are encountered, investigate and measure the nature and extent of conflict. Promptly submit a written report to Architect.

3.2 GENERAL

A. During removal of existing roofing and related materials, report to Owner areas of damaged, deteriorated, or otherwise unsuitable structural deck or framing materials exposed during work. Do not cover or remove unacceptable deck or framing areas until reviewed by Owner. Provide temporary protection to areas in question. Use care in removal of membrane flashings and decking to prevent damage to substrates.

B. Do not remove more material than can be replaced in one day with the new specified roof system.

C. Take precautions to prevent water on or within existing roof system from migrating into building or new roof system.

D. Review available prints and/or inspect interior of structure to ascertain if electrical or other service has been placed above roof deck or in contact with underside of deck.

E. Set cutting blades of mechanical cutting equipment to proper depth to prevent scoring or damage to structural deck. Use care in removal of membrane flashing to prevent damage to substrates.

F. Control visible emissions during roof removal and at dumpster level.

G. Remove roof materials down to structural deck. Remove and reinstall existing fiberglass insulation in the deck flutes as required to sweep, clean, and vacuum debris from deck surfaces, including flutes of steel deck.

3.3 SELECTIVE DEMOLITION

A. Demolish and remove existing materials as expressly indicated or implied on the drawings. Demolition shall include but may not be limited to the following:

1. Remove existing roofing system(s) and associated components in preparation for new systems. Vacuum loose gravel utilizing a vacuum truck to remove loose stone prior to removal of roof system.
2. Remove and reinstall existing fiberglass insulation in the deck flutes as required to clear the flutes free of debris.
3. Remove wood and wall panel components where required in preparation for new overflow scuppers.
4. Remove existing sheet metal caps, fascias, edge metal, counterflashings, penetration flashings, and related sheet metal items unless indicated on Drawings to remain.
5. Remove existing roof drains and associated materials in preparation for new drain bowl assemblies and leader pipe connections.
6. Remove existing expansion joint in preparation for new.
7. Remove existing roof access hatch in preparation to new.
8. Remove, augment, and reinstall existing interior access ladder.
9. Remove existing membrane on lids of plywood enclosures, typical of eight (8).

B. Removed and Reinstalled Items:
1. Clean and repair items to functional condition adequate for intended reuse. Paint equipment to match new equipment.
2. Pack or crate items after cleaning and repairing. Identify contents of containers.
3. Protect items from damage during transport and storage.
4. Reinstall items in locations indicated. Comply with installation requirements for new materials and equipment. Provide connections, supports, and miscellaneous materials necessary to make item functional for use indicated.

C. Existing Items to Remain: Protect construction indicated to remain against damage and soiling during selective demolition. When permitted by Architect, items may be removed to a suitable, protected storage location during selective demolition and reinstalled in their original locations after selective demolition operations are complete.

3.4 DISPOSAL OF DEMOLISHED MATERIALS

A. General: Except for items or materials indicated to be reused, salvaged, reinstalled, or otherwise indicated to remain Owner's property, remove demolished materials from Project site and legally dispose of them in an EPA-approved landfill.

B. Burning: Do not burn demolished materials.

C. Disposal: Transport demolished materials off Owner's property and legally dispose of them.

3.5 CLEANING

A. Clean demolition materials and debris from roof daily.

B. Clean debris that has fallen into building, including material on top surface of ceiling.

C. Clean all surfaces of exposed steel joists, suspended lighting and accessories within the Gymnasium and similar areas with exposed roof framing.

D. Repair damage to building by replacing damaged material or component in-kind.

E. Clean site daily to satisfaction of Owner.

F. Dispose of debris and demolition materials at landfill in accordance with applicable regulations.

G. Remove construction related debris that accumulates on top of cat walk.

END OF SECTION 024119

SECTION 027490 – PAVEMENT REPAIR

PART 1 - GENERAL

1.1 SECTION INCLUDES

A. Repairing Portland cement and bituminous concrete pavements at each location due to damage related to the work.

1.2 RELATED SECTIONS

A. Section 015000 - Temporary Facilities and Controls

B. Section 016500 - Product Delivery Requirements

1.3 SUBMITTALS

A. General: Comply with Section 013300 – Submittal Procedures.

B. Product data:
   1. Proposed mix design for each type of paving material.
   2. Material certificates for paving materials.
   3. Joint fillers and sealers.

C. Test reports.

1.4 QUALITY ASSURANCE

A. Comply with Maryland State Highway Administration (MSHA) Specifications. Use locally available materials and gradations with a satisfactory record of previous installations.

B. Engage a testing laboratory acceptable to Engineer to perform material evaluation tests and to design mixes.

1.5 PROJECT CONDITIONS

A. Weather limitations:
   1. Apply asphalt prime and tack coats when ambient temperature is above 50° F (10° C) and when temperature has not been below 35° F (1° C) for 12 hours immediately prior to application. Do not apply when base is wet or contains an excess of moisture.
   2. Construct hot-mixed asphalt surface course when atmospheric temperature is above 40° F (4° C) and when base is dry. Base course may be placed when air temperature is above 30° F (-1° C) and rising.

PART 2 - PRODUCTS

2.1 MATERIALS

A. Reinforcing bars: ASTM A 615, Grade 60, deformed

B. Bonding compound: Polyvinyl acetate or acrylic base, rewettable.

C. Coarse aggregate for asphalt: Sound, angular crushed stone or crushed gravel complying with ASTM D 692-88.

D. Fine aggregate for asphalt:
   1. Asphalt: Sharp-edged natural sand or sand prepared from stone, gravel, or combinations thereof, complying with ASTM D 1073.

E. Asphalt cement: ASTM D 3381 for viscosity-graded material; ASTM D 946 for penetration-graded material.

F. Prime coat: Cut-back asphalt type, ASTM D 2027; MC-30, MC-70 or MC-250

G. Tack coat: Emulsified asphalt; ASTM D 977.

H. Portland cement: ASTM C 150, Type I

I. Aggregate for portland cement concrete: Normal weight, ASTM C 33. Local aggregates not complying with ASTM C 33 but that tests or actual service have shown to produce concrete of adequate strength and durability may be used when acceptable to Engineer.

J. Admixtures for portland cement concrete:
   1. Contain not more than 0.1 percent chloride ions.
   2. Air-entraining: ASTM C 260, certified by manufacturer to be compatible with other admixtures included in mix.
   3. High-range Water-reducing: ASTM C 494, Type F or Type G.
   4. Others as accepted with accepted mix designs.

K. Moisture-retaining cover: Polyethylene film or polyethylene-coated burlap

L. Antispalling compound: Boiled linseed oil and mineral spirits, complying with AASHTO M-233.

M. Lane marking paint: Alkyd-resin type, ready-mixed complying with AASHTO M 248, Type I, color to match existing markings.

N. Hot-poured elastomeric sealant: Manufacturer's standard sealant for concrete and asphalt pavement joints, complying with ASTM D 3405

O. Joint filler: Preformed strips, complying with ASTM D 1751, asphalt impregnated fiberboard, or other as compatible with sealants.

2.2 ASPHALT-AGGREGATE MIXTURE

A. Provide plant-mixed, hot-laid asphalt-aggregate mixture complying with ASTM D 3515 and as recommended by local paving authorities to suit project conditions.

B. Base course: CR-6 aggregate meeting requirements of MSHA Article 32.08.

C. Bituminous surface course: MSHA Specification B.

2.3 PORTLAND CEMENT CONCRETE

A. 3,000 psi 28-day compressive strength; WC ratio 0.46 maximum, air-entrained

1. Slump limits: 8-inches minimum for concrete containing high-range water-reducing admixture (superplasticizer); 3-inches for other concrete

B. Air content: 5 to 8 percent

PART 3 - EXECUTION

3.1 PREPARATION

A. General: Do not proceed until subgrade is firm, hard and unyielding, and at the elevation to result in correct finish grades.

B. Asphalt prime coat: Apply at rate of 0.20 to 0.50 gallon per square yard, over compacted subgrade. Apply material to penetrate and seal, but not flood, surface. Cure and dry as long as necessary to attain penetration and evaporation of volatile.

C. Asphalt tack coat: apply to contact surfaces of previously constructed asphalt or portland cement concrete and surfaces abutting or projecting into hot-mixed asphalt pavement. Distribute at rate of 0.05 to 0.15 gallon per square yard of surface.

1. Allow to dry until at proper condition to receive paving

D. In applying bituminous materials, do not smear adjoining concrete surfaces. Remove and clean damaged surfaces.

E. Portland cement pavement: Provide 48 hours notice before scheduled concrete placement and arrange for Owner's representative to inspect forms and reinforcement.

3.2 PLACING ASPHALT PAVEMENT

A. Place hot-mixed asphalt mixture on prepared surface, spread, and strike off. Spread mixture at minimum temperature of 225° F (107° C). Place areas inaccessible to equipment by hand. Place each course to required grade, cross-section, and compacted thickness.

B. Joints: Make joints between old and new pavements, or between successive days' work, to ensure continuous bond between adjoining work. Construct joints to have same texture, density,

and smoothness as other sections of hot-mixed asphalt course. Clean contact surfaces and apply tack coat.

C. Curbs: Construct curbs over compacted pavement surfaces. Apply a light tack coat unless pavement surface is still tacky and free from dust.

1. Place curb materials to cross-section indicated or, if not indicated, to local standard shapes, by machine or by hand in wood or metal forms. Tamp hand-placed materials and screed to smooth finish. Remove forms as soon as material has cooled.

3.3 ROLLING ASPHALT PAVEMENT

A. General: Begin rolling when mixture will bear roller weight without excessive displacement.

B. Compact mixture with hot hand tampers or vibrating plate compactors in areas inaccessible to rollers.

C. Breakdown rolling: Accomplish breakdown or initial rolling immediately following rolling of joints and outside edge. Check surface after breakdown rolling and repair displaced areas by loosening and filling if required, with hot material.

D. Second rolling: Follow breakdown rolling as soon as possible, while mixture is hot. Continue second rolling until mixture has been evenly compacted.

E. Finish rolling: Perform finish rolling while mixture is still warm enough for removal of roller marks. Continue rolling until roller marks are eliminated and course has attained 95 percent laboratory density.

F. Patching: Remove and replace paving areas mixed with foreign materials and defective areas. Cut out such areas and fill with fresh, hot-mixed asphalt. Compact by rolling to specified surface density and smoothness.

G. Protection: After final rolling, do not permit vehicular traffic on pavement until it has cooled and hardened.

H. Erect barricades to protect paving from traffic until mixture has cooled enough not to become marked.

3.4 INSTALLING REINFORCEMENT FOR PORTLAND CEMENT CONCRETE

A. Locate, place, and support reinforcement as shown on drawings, or to match existing reinforcement being replaced.

3.5 PORTLAND CEMENT CONCRETE PLACEMENT

A. Do not begin placement before Owner’s representative has inspected forms and reinforcement as specified in “Preparation” above.

B. Moisten subbase if required to provide a uniform dampened condition at time concrete is placed. Do not place concrete around manholes or other structures until they are at required finish elevation and alignment.

C. Place concrete by methods that prevent segregation of mix. Consolidate concrete along face of forms and adjacent to transverse joints with internal vibrator. Keep vibrator away from joint assemblies, reinforcement, or side forms. Use only square-faced shovels for hand-spreading and consolidation. Consolidate with care to prevent dislocation of reinforcing, dowels, and joint devices.

D. Use bonding agent at locations where fresh concrete is placed against hardened or partially hardened concrete surfaces.

E. Deposit and spread concrete in a continuous operation between transverse joints as far as possible. If interrupted for more than 1/2 hour, place a construction joint.

F. Curbs and gutters: Automatic machine may be used for curb and gutter placement at Contractor's option. If machine placement is to be used, submit revised mix design and laboratory test results that meet or exceed minimums specified. Machine placement must produce curbs and gutters to required cross-section, lines, grades, finish, and jointing as specified for formed concrete. If results are not acceptable, remove and replace with formed concrete as specified.

G. Construction expansion, weakened-plane (contraction), and construction joints true to line with face perpendicular to surface of concrete. Construct transverse joints at right angles in the centerline, unless otherwise indicated

1. When joining existing structures, place transverse joints to align with previously placed joints, unless otherwise indicated.
2. Provide weakened-plane (contraction) joints, sectioning concrete into areas to match existing joint pattern. Construct weakened-plane joints for a depth equal to at least 1/4 concrete thickness.
3. Place construction joints at end of placements and at locations where placement operations are stopped for more than 1/2 hour, except where such placements terminate at expansion joints.
   a. Use standard metal keyway-section forms.
   b. Where load transfer-slip dowel devices are used, install so that one end of each dowel bar is free to move.
4. Expansion joints: Provide premolded joint filler for expansion joints abutting concrete curbs, catch basins, manholes, inlets, structures, walks, and other fixed objects, unless otherwise indicated
   a. Extend joint fillers full width and depth of joint, not less than 1/2-inch or more than 1-inch below finished surface where joint sealer is indicated. If no joint sealer, place top of joint filler flush with finished concrete surface.
   b. Protect top edge of joint filler during concrete placement with a metal cap or other temporary material. Remove protection after concrete has been placed on both sides of joint.

3.6 FINISHING PORTLAND CEMENT CONCRETE

A. After striking off and consolidating concrete, smooth surface by screeding and floating. Use hand methods only where mechanical floating is not possible. Adjust floating to compact surface and produce uniform texture

B. After floating, test surface for trueness with a 10-foot straightedge. Distribute concrete as required to remove surface irregularities, and refloat repaired areas to provide a continuous smooth finish.

C. Work edges of slabs, gutters, back top edge of curb, and formed joints with an edging tool, and round to 1/2-inch radius, unless otherwise indicated. Eliminate tool marks on concrete surface.

D. After completion of floating and when excess moisture or surface sheen has disappeared, complete troweling and finish surface to match existing adjacent surfaces.

1. Broom finish by drawing a fine-hair broom across concrete surface perpendicular to line of traffic. Repeat operation if required to provide a fine line texture acceptable to Engineer.

   a. On inclined slab surfaces, provide a coarse, non-slip finish by scoring surface with a stiff-bristled broom, perpendicular to line of traffic.

2. Burlap finish by dragging a seamless strip of damp burlap across concrete, perpendicular to line of traffic. Repeat operation to provide a gritty texture acceptable to Engineer.

3.7 CURING PORTLAND CEMENT CONCRETE

A. Protect and cure finished concrete paving by moist-curing.

B. Antispalling treatment: Apply treatment to concrete surfaces no sooner than 28 days after placement, to clean, dry concrete free of oil, dirt, and other foreign material. Apply curing and sealing compound at a maximum coverage rate of 300 s.f. per gallon. Apply antispalling compound in 2 sprayed applications. First application at rate of 40 sq. yds. per gal.; second application, 60 sq. yds. per gallon. Allow complete drying between applications.

3.8 FIELD QUALITY CONTROL

A. Independent testing laboratory shall perform applicable tests in accordance with AAC DPW specifications.

3.9 REPAIRS AND PROTECTIONS

A. Repair or replace broken or defective pavement.

B. Protect pavement from damage until acceptance of work. Exclude traffic from pavement for at least 14 days after placement.

END OF SECTION 027490

SECTION 029200 – LAWNS AND GRASSES

PART 1 - GENERAL

1.1 SECTION INCLUDES

A. Replacement of disturbed or damaged grassed areas with sod turf.

1.2 SUBMITTALS

A. Certificates:
   1. Test analysis of topsoil.
   2. Grower's certification of grass species, and location of field from which sod is cut.
   3. Manufacturer's certificate of composition of fertilizer.

1.3 GUARANTEE

A. In accordance with the general project warranty and correction period, notify the Engineer within the week before the end of the correction period and arrange a joint inspection of the turf. Where any part of the planting has failed to thrive, replace it with new sod, meeting the same requirements.

1.4 MAINTENANCE

A. Contractor is responsible for maintenance during the Establishment period specified in Part 3.

PART 2 - PRODUCTS

2.1 SOIL MATERIALS

A. Fertilizer: Granular mixed turf formula of 10-20-10 with 1/2 Nitrogen derived from urea, containing no cyanamid compounds or hydrated lime, complying with applicable requirements of State laws.

B. Topsoil: Sandy loam, clay loam, loam, silt loam, or sandy clay loam, containing no subsoil, slag, cinders, stones, lumps of soil, sticks, roots, trash or other extraneous materials larger than 1-1/2 inches in diameter. Topsoil must be free of plants or plant parts of bermuda grass, quackgrass, johnson grass, nutsedge, poison ivy, or Canada thistle. Topsoil shall be screened and tested by a recognized laboratory, and shall have pH of 5.0 to 7.0, and soluble salts no higher than 500 parts per million. Organic matter shall be not less than 1.5 percent by the Thomas Method.

C. Water: Obtain from fresh water sources and free from injurious chemicals and other toxic substances harmful to plant life. No brackish water permitted.

2.2 PLANT MATERIALS

A. Sod: Nursery grown, certified as classified in the ASPA Guideline Specifications for Sodding. The composition of the grass species in the sod shall be a tall fescue blend.

1. State certified, grown on natural native soils comparable to those at job site.
2. Free of disease and soil-borne insects.
3. Free of clover, other broadleaf plants, or noxious weeds. Sod will be considered free of such weeds if fewer than two weeds are found per 100 square feet of area.
4. Mowed prior to stripping, maintained for a minimum of three months at or near height of final clipping at nursery. Maximum height 2-1/2-inches.
5. Relatively free of thatch. Thatch build-up which significantly detracts from appearance of sod may be sufficient cause for rejection.
6. Machine stripped at a uniform soil thickness of approximately 1-inch ± 1/4-inch. Minimum acceptable soil thickness 3/4-inch. Measurement for thickness to exclude top growth and thatch.
7. Individual pieces of sod to be cut to supplier's standard width and length. (Maximum allowable deviation from standard widths and lengths 5 percent). No broken pads or torn or uneven ends permitted.
8. Root development to be such that standard size pieces will support their own weight and retain their size and shape when suspended vertically from a firm grasp on uppermost 10 percent of area.
9. Under moderate moisture conditions, sod shall weigh no more than 7 pounds per square foot, nor less than 4 pounds per square feet.

PART 3 - EXECUTION

3.1 REGRADING

A. Grade the existing soil as indicated on the drawings and to provide the minimum of 4-inches of new topsoil on areas to be sodded.

B. After the areas to be topsoiled have been approved for proper subgrade, the surface shall be loosened and made friable by cross-discing or other approved methods, to a full depth of at least 2-inches to permit bonding of topsoil to the subgrade. Remove stones and debris 1-1/2 inches or more in any dimension.

3.2 TOPSOILING AND FINISH GRADING

A. Place topsoil on all open areas of the site where grass is to be placed.

B. Do not place topsoil which is frozen or muddy, when the subgrade is excessively wet, or in a condition that may otherwise be detrimental to grading or sodding.

C. Topsoil shall be uniformly distributed and a minimum depth of 6-inches after firming. Finished surface shall be firm, smooth and true to the required finish grades with a maximum variation of 0.1 ft.

3.3 SODDING

A. Transplant sod within 24 hours from the time it is harvested unless stacked at its destination in a manner satisfactory to Engineer.

B. Uniformly apply fertilizer at manufacturer's recommended rate

C. Sod to a smooth, uniform, well-tilled surface true to line and cross-section

D. Lift sod by hand and place with closed joints and no overlapping. Stagger joints. Sprinkle sod immediately. Roll with roller weighing not more than 150 lbs. per foot (223 kg per meter) of roller width.

3.4 ESTABLISHMENT OF TURF

A. Established turf: Dense and uniform in growth and freshness.

B. All areas shall produce a dense, well-established turf. Repair eroded, dead, or bare areas.

C. Water as required to keep sod moist until established and accepted.

D. When grass reaches a height of 3 to 4-inches, mow it to a height of 2-inches. Remove grass clippings.

E. Establishment period: Turf will not be accepted by Owner until inspection shows it to be well-established after 30 days from the time of sodding and after the second mowing.

END OF SECTION 029200

SECTION 051200 - STRUCTURAL STEEL FRAMING

PART 1 - GENERAL

1.1 SUMMARY

A. Section Includes:
   1. Structural steel.

1.2 SPECIAL JOB CONDITIONS

A. Building will be occupied during construction. Contractor shall take all precautions necessary to protect persons and property. Provide all necessary temporary protection and barriers to segregate work area and to prevent damage to adjacent areas.

B. Work shall be scheduled and coordinated with Owner's Representative. Contractor shall provide Phased Construction Plan and Schedule for approval by Owner's Representative.

1.3 PREINSTALLATION MEETINGS

A. Preinstallation Conference: Conduct conference at Project site.

1.4 SUBMITTALS

A. Product Data: For each type of product.

B. Shop Drawings: Show fabrication of structural-steel components.

C. Qualification Data: For Installer, fabricator, independent testing, and special inspections agency.

D. Welding certificates: Prepare written certification that welding procedures and personnel comply with requirements in the Contract Documents. Submit record of Welding Procedure Specification (WPS) and Procedure Qualification Record (PQR) on AWS forms. Include names of firms and personnel certified.

E. Mill test reports for structural steel, including chemical and physical properties.

F. Source quality-control and Special Inspection reports.

G. Field quality-control and Special Inspection reports.

H. Phased Construction Plan and Schedule.

1.5 QUALITY ASSURANCE

A. Fabricator Qualifications: A qualified fabricator that participates in the AISC Quality Certification Program and is designated an AISC-Certified Plant, Category STD, or is accredited by the IAS Fabricator Inspection Program for Structural Steel (AC 172).

B. Installer Qualifications: A qualified installer who participates in the AISC Quality Certification Program and is designated an AISC-Certified Erector, Category CSE.

C. Welding Qualifications: Qualify procedures and personnel according to AWS D1.1/D1.1M, "Structural Welding Code - Steel."

D. Comply with applicable provisions of the following specifications and documents:
   1. AISC 303.
   2. AISC 360.
   3. RCSC's "Specification for Structural Joints Using ASTM A 325 or A 490 Bolts."

E. Special Inspections: Coordinate with Owner to engage a qualified testing/special inspections agency to perform shop and field tests and inspections in accordance with the Virginia Construction Code and local code official’s requirements for Special Inspections regarding structural steel construction.

PART 2 - PRODUCTS

2.1 STRUCTURAL-STEEL MATERIALS

A. Plate and Bar: ASTM A 36/A 36M, ASTM A 572/A 572M, Grade 50, as indicated in the Drawings.

B. Welding Electrodes: Comply with AWS requirements. All welds shall develop the full strength of the material being welded, using EXX 70 electrodes, minimum.

2.2 PRIMER

A. Primer: Fabricator's standard lead- and chromate-free, nonasphaltic, rust-inhibiting primer complying with MPI#79 and compatible with topcoat.

2.3 PAINT

A. Refer to Division 09 Section 099100 “Painting” for paint requirements.

2.4 FABRICATION

A. Structural Steel: Fabricate and assemble in shop to greatest extent possible. Fabricate according to AISC 303, "Code of Standard Practice for Steel Buildings and Bridges," and to AISC 360.

2.5 SOURCE QUALITY CONTROL

A. Testing Agency: Coordinate with Owner to engage a qualified testing/special inspections agency to perform shop tests and inspections in accordance with the Virginia Construction Code and code official's requirements for Special Inspections regarding mill structural steel.
   1. Provide testing agency with access to places where structural-steel work is being fabricated or produced to perform tests and inspections.

B. Furnish Special Inspection testing and inspection reports from the Special Inspection agency to Owner.

PART 3 - EXECUTION

3.1 PREPARATION

A. Existing Structural Steel Framing: Remove existing coatings within 2-inches (minimum) of field welds from surfaces to receive new built-up steel repairs. Coatings shall be removed according to SSPC SP2 (hand tools) or SSPC SP3 (power tools).

B. General: Provide clamp devices or tack welds for securing metal fabrications to in-place construction. Perform cutting, drilling, and fitting required for installing metal fabrications. Set metal fabrications accurately in location, with edges and surfaces level, plumb, and true.

3.2 SHOP PRIMING

A. Shop prime steel surfaces except the following:
   1. Surfaces to be field welded, within 2-inches of field weld.
   2. Surfaces of high-strength bolted, slip-critical connections.

B. Surface Preparation: Clean surfaces to be painted. Remove loose rust and mill scale and spatter, slag, or flux deposits. Prepare surfaces according to the following specifications and standards:
   1. SSPC-SP 2, "Hand Tool Cleaning."
   2. SSPC-SP 3, "Power Tool Cleaning."

C. Priming: Immediately after surface preparation, apply primer according to manufacturer's written instructions and at rate recommended by SSPC to provide a minimum dry film thickness of 1.5 mils. Use priming methods that result in full coverage of joints, corners, edges, and exposed surfaces.

3.3 ERECTION

A. Set structural steel accurately in locations and to elevations indicated and according to AISC 303 and AISC 360.

B. Maintain erection tolerances of structural steel within AISC 303, "Code of Standard Practice for Steel Buildings and Bridges."

3.4 FIELD CONNECTIONS

A. Weld Connections: Comply with AWS D1.1/D1.1M and AWS D1.8/D1.8M for tolerances, appearances, welding procedure specifications, weld quality, and methods used in correcting welding work.
   1. Comply with AISC 303 and AISC 360 for bearing, alignment, adequacy of temporary connections, and removal of paint on surfaces adjacent to field welds.
   2. Remove backing bars or runoff tabs, back gouge, and grind steel smooth.
   3. Assemble and weld built-up sections by methods that maintain true alignment of axes without exceeding tolerances in AISC 303, "Code of Standard Practice for Steel Buildings and Bridges," for mill material.

3.5 PAINTING

A. Refer to Division 09 Section 099100 “Painting” for painting requirements.

3.6 FIELD QUALITY CONTROL

A. Special Inspections: Coordinate with Owner to engage a qualified Special Inspections agency to perform the following special inspections/tests in accordance with the AISC Specification for Structural Steel Buildings (AISC 360), the Virginia Construction Code, and the local code official’s requirements for Special Inspections:
   1. Verify structural-steel materials and inspect steel frame joint details in accordance with the project documents and approved shop drawings.
   2. Verify weld materials and inspect welds: Welded connections shall be inspected according to the Virginia Construction Code and local code official’s Special Inspections requirements. Visually inspect shop-welded connections according to AWS D1.1/D1.1M and the following inspection procedures, at Special Inspection testing/inspection agency's option:
      a. Liquid Penetrant Inspection: ASTM E 165.
      b. Magnetic Particle Inspection: ASTM E 709; performed on root pass and on finished weld. Cracks or zones of incomplete fusion or penetration are not accepted.
      c. Ultrasonic Inspection: ASTM E 164.
      d. Radiographic Inspection: ASTM E 94.

3.7 SURFACE CORRECTION – FERROUS METALS

A. Touch up surfaces and finishes after erection.
   1. Shop painted Surfaces: Clean field welds, bolted connections, and abraded areas and touch up paint with same material as used for surrounding surfaces.
   2. Galvanized Surfaces: Clean field welds, bolted connections, and abraded areas and repair galvanizing to comply with ASTM A 780.

END OF SECTION 051200

SECTION 053100 - STEEL DECKING

PART 1 - GENERAL

1.1 SUMMARY

A. This Section specifies requirements for the following Scope of Work:
   1. Replace deteriorated steel deck uncovered during demolition operations.
   2. Clean and prime surficially rusted areas of steel decking and framing uncovered during removal operations.
   3. Provide roof drain stiffening plates.

1.2 UNIT PRICES

A. Technical requirements for related Unit Price work are defined in this section. Refer to Division 01 Section “Unit Prices,” for quantities to be carried in the Base Bid and provided on the Bid Form.

1.3 SUBMITTALS

A. Product Data: For each type of deck, accessory, and product indicated.

B. Shop Drawings: Show layout and types of deck panels, anchorage details, reinforcing channels, pans, cut deck openings, special jointing, accessories, and attachments to other construction.

C. Product certificates.

D. Welding certificates.

1.4 QUALITY ASSURANCE

A. Welding: Qualify procedures and personnel according to AWS D1.3, "Structural Welding Code - Sheet Steel."

B. AISI Specifications: Comply with calculated structural characteristics of steel deck according to AISI's "North American Specification for the Design of Cold-Formed Steel Structural Members."

C. Verify profile of existing deck prior to ordering replacement panels.

1.5 DELIVERY, STORAGE, AND HANDLING

A. Protect steel deck from corrosion, deformation, and other damage during delivery, storage, and handling.

B. Stack steel deck on platforms or pallets and slope to provide drainage. Protect with a waterproof covering and ventilate to avoid condensation.

PART 2 - PRODUCTS

2.1 ROOF DECK

A. Steel Roof Deck: Fabricate panels, without top-flange stiffening grooves, to comply with "SDI Specifications and Commentary for Steel Roof Deck," in SDI Publication No. 30, and with the following:

1. Galvanized Steel Sheet: ASTM A 653/A 653M, Structural Steel (SS), Grade 33 G60 zinc coating.
2. Deck Profile: To match existing.
3. Profile Depth: To match existing.
4. Design Uncoated-Steel Thickness: 20-gauge

2.2 ACCESSORIES

A. General: Provide manufacturer's standard accessory materials for deck that comply with requirements indicated.

B. Fasteners for securing replacement roof deck panels to overlapped deck: #10-16 x 1-inch, self-drilling, self-tapping screws, hex-head, either stainless steel or factory-treated, fluorocarbon-coated steel (in accordance with FM 4470 requirements) in order to prevent rusting. Fasteners shall be designed to penetrate structural steel over 1/4-inch thick.

C. Fasteners for securing steel deck to structural framing: #14-14 self-drilling, self-tapping screws, 1-inch long, hex-head, fluorocarbon-coated steel (in accordance with FM 4470 requirements).

D. Primer for steel framing: Rust-inhibitive industrial enamel primer by Sherwin Williams or accepted substitute. Primer shall be lead and chromate-free.

E. Roof drain stiffening plates: Refer to Division 22 Section “Roof Drains”

PART 3 - EXECUTION

3.1 GENERAL

A. Decking found to be damaged, deteriorated, deflected or rusted must be reviewed by Owner or his Representative prior to roof system installation operations. Unsound steel deck panels shall be removed in their entirety. Partial panel replacement shall not be permitted.

B. Contractor shall notify Owner of damaged or deteriorated structural framing uncovered during deck replacement operations prior to installation of replacement decking.

C. Install deck panels and accessories according to applicable specifications and commentary in SDI Publication No. 30, manufacturer's written instructions, requirements in this Section, and as indicate

3.2 INSTALLATION

A. Place deck panels on supporting frame and adjust to final position with ends accurately aligned and bearing on supporting frame before being permanently fastened. Do not stretch or contract side-lap interlocks.

B. Place deck panels flat and square and fasten to supporting frame without warp or deflection.

C. Cut and neatly fit deck panels and accessories around openings and other work projecting through or adjacent to deck.

D. Mechanical fasteners may be used in lieu of welding to fasten deck. Locate mechanical fasteners along centerline of framing members or top joist chord angles. Attach deck according to deck manufacturer's written instructions. In no case shall fasteners be spaced more than 6-inches on center.

E. End Bearing: Install deck ends over supporting frame with a minimum end bearing of 1-1/2 inches.

F. Laps: side laps shall be 3-inches, minimum. End laps shall be 6-inches minimum. Secure panel laps at 16-inches on center.

3.3 CLEANING AND PRIMING

A. Surficially rusted steel framing members (uncovered during deck removal work) and surficially rusted deck areas shall be mechanically cleaned of rust and scale according to Society for Protective Coating (SPC) SP-3 Standards and vacuumed clean.

B. Apply alkyd primer to cleaned deck and framing member areas, by brush, at rate of approximately 300 square feet per gallon. Allow 1-2 hours drying time prior to deck/roofing installation.

END OF SECTION 053100

SECTION 061000 - ROUGH CARPENTRY

PART 1 - GENERAL

1.1 SUMMARY

A. This section specifies requirements for the following Scope of Work:
   1. Provide fire-treated wood blocking, stud walls, supports, shims, and other miscellaneous assemblies as indicated.

1.2 SUBMITTALS

A. Product Data: For each item specified in Part 2 of this Section.

1.3 PROJECT CONDITIONS

A. Wood blocking shown on Drawings may be greater or less than quantities required to match insulation thickness. Include required quantities in Base Bid.

B. Maintain constant perimeter heights as indicated to provide equal edge metal and fascia reveals.

C. Store wood to prevent distortion and to protect from atmospheric moisture.

D. Dimensional lumber and plywood shall be kiln dried unless otherwise indicated. If pressure treated lumber is required by the roof membrane manufacturer, additional compensation will not be considered. Additionally, if pressure treated wood is used, wood shall be separated from all metal components to avoid galvanic corrosion.

PART 2 - PRODUCTS

2.1 WOOD PRODUCTS, GENERAL

A. Lumber: DOC PS 20 and applicable rules of lumber grading agencies certified by ALSC.
   1. Factory mark each piece of lumber with grade stamp of grading agency.
   2. Maximum moisture content at time of dressing: 19 percent, maximum, for 2-inch nominal thickness or less.
   3. All lumber shall be fire-retardant-treated and engineered for use in exterior applications.

B. Wood blocking and framing shall construction or No. 2 grade and any of following species:
   1. Douglas fir-larch, Douglas fir-larch (north), or Douglas fir-south; NLGA, WCLIB, or WWPA.
   2. Hem-fir or Hem-fir (north); NLGA, WCLIB, or WWPA.

3. Southern pine; SPIB.
4. Spruce-pine-fir (south) or Spruce-pine-fir; NELMA, NLGA, WCLIB, or WWPA.

2.2 FIRE-RETARDANT-TREATED MATERIALS

A. General: Where fire-retardant-treated materials are indicated, materials shall comply with requirements in this article, that are acceptable to authorities having jurisdiction, and with fire-test-response characteristics specific as determined by testing identical products per test method indicated by a qualified testing agency.

B. Fire-Retardant-Treated Lumber and Plywood by Pressure Process: Products with a flame-spread index of 25 or less when tested according to ASTM E 84, and with no evidence of significant progressive combustion when the test is extended an additional 20 minutes, and with the flame front not extending more than 10.5-feet (3.2 m) beyond the centerline of the burners at any time during the test.
   1. Treatment shall not promote corrosion of metal fasteners.
   2. Exterior Use: Treated materials shall comply with requirements specified above for fire-retardant-treated lumber and plywood by pressure process after being subjected to accelerated weathering according to ASTM D 2898. Use for exterior locations and where indicated.
   3. Design Value Adjustment Factors: Treated lumber shall be tested according to ASTM D 5664 and design value adjustment factors shall be calculated according to ASTM D 6841.

C. Identify fire-retardant-treated wood with appropriate classification marking of qualified testing agency.

2.3 DECKING AND SHEATHING

A. Plywood Sheathing: APA PS 1 Exposure 1 sheathing, 3/4-inch thick.

2.4 FASTENERS

A. Fasteners, washers, and accessories: Stainless steel or galvanized steel.
   1. Galvanized: ASTM A 153, hot-dip method. Electrogalvanized items unacceptable.

B. Wood-to-wood connections: Galvanized, annular-threaded or ring-shanked common nails, 3-inches long.

C. Termination bar to wood: Number 12, self-drilling, self-tapping screws of sufficient length to penetrate substrate 1-1/2-inches minimum.

D. Wood blocking to steel deck and steel framing: Number 14, self-drilling, self-tapping screws, factory treated with fluorocarbon coating or stainless steel, of sufficient length to penetrate upper flutes of steel deck or steel framing 1-inch minimum and 1-1/4-inches maximum.

E. Plywood to concrete walls: 1/4-inch diameter, 2-inch long drive pin anchors, with zinc sheath and stainless steel pin.

2.5 ACCESSORIES

A. Batt insulation: See Division 07 Section “Roof and Deck Insulation.”

B. Self-Adhering Modified Bitumen: See Division 07 Section “Flashing and Sheet Metal.”

PART 3 - EXECUTION

3.1 INSTALLATION, GENERAL

A. Selection of lumber pieces:
   1. Select members so that knots and obvious defects will not interfere with proper fastening and will allow making of proper connections. Cut out and discard defects that render piece unable to serve intended function.
   2. Lumber may be rejected for excessive warp, twist, bow, crook, mildew, fungus, mold, or moisture content, as well as for improper cutting and fitting.

B. Set rough carpentry to required levels and lines, with members plumb, true to line, cut, and fitted. Fit rough carpentry to other construction; scribe and cope as needed for accurate fit. Locate nailers, blocking, and similar supports to comply with requirements for attaching other construction.

C. Comply with Factory Mutual (FM) Data Sheet 1-49 for anchoring perimeter blocking. Reduce fastener spacing by half within 8-feet of exterior corners.

D. Cut butt joints in woodwork to provide smooth, uniform line without irregularities. Stagger butt joints at multiple layers of blocking, layer to layer. Gap joints 1/8-inch. Minimum length of any individual piece of woodwork at perimeter edge shall be 3-feet, with minimum of 2 fasteners per piece.

E. Overlap wood blocking joints at corners from layer to layer.

F. Protect installed wood from moisture and weather. Wood degraded by exposure shall be rejected.

3.2 FASTENING OF WOODWORK

A. General:
   1. Countersink fasteners below top plane of nailers.
   2. Achieve 1-1/4-inch minimum penetration into substrate when fastening 2x lumber to structural concrete, or 2x lumber. Provide 1-inch minimum and 1-1/2-inches maximum penetration of metal decks.

3. Provide 2 rows of fasteners at the specified frequency for wood blocking 2-inches by 8-inches nominal and wider.
4. When attaching wood to concrete or masonry, through-drill wood 1/16-inch larger than fastener shank.
5. Resecure existing wood blocking scheduled for reuse with appropriate fasteners spaced at 48-inches on center, staggered off centerline.

B. Wood blocking:
1. To wood blocking: With annular-threaded, ring-shank nails, 12-inches on center, maximum, and staggered slightly off centerline of member being installed.
2. At deck penetrations to steel framing and steel decking: With self-drilling, self-tapping screws spaced at 16-inches on center maximum in staggered pattern.
3. For nailer to nailer connections, penetrate member being fastened to 3/4 thickness of member. Fasten 16-inches on center, staggered.

C. Plywood:
1. To concrete/masonry walls: With drive pins spaced at 8-inches on center vertically and 16-inches on center horizontally staggered from row to row. Predrill pilot holes in accordance with fastener manufacturer's printed instructions.
2. To wood blocking: With nails spaced at 8-inches on center along each framing member.
   a. Countersink fasteners below top plane of plywood.
   b. Provide 1/8-inch gap between successive sections of plywood. Align finished surfaces to vary not more than 1/16-inch from plane of surfaces of adjacent units.
   c. Place panels with long dimension perpendicular to support.
   d. Install roof deck panels in staggered array, with panel ends in successive rows being offset. Minimum panel placement size shall be 48-inches by 48-inches. Each panel shall span minimum of 3 supports.
   e. Center joints accurately over support.

3.3 STUD WALLS

A. Fabricate stud walls with continuous top and bottom plates and studs spaced at 16-inches on center, maximum. Secure studs to top and bottom plates with 2 fasteners at top and bottom connections. Provide stud walls with extra wide bottom plate where indicated.

B. Where stud walls are to be installed over existing wood, resecure existing wood at 48-inches on center maximum. Secure bottom plate of stud wall to existing substrate with 2 rows of fasteners spaced at 16-inches on center. Provide stud walls in maximum 8-foot lengths. Secure mating studs of adjacent wall sections with 2 rows of fasteners spaced 8-inches on center.

C. Position plywood so that ends align with studs and extend onto adjacent section of stud walls 32-inches minimum. Overlap plywood onto existing wall and or framing where indicated. Secure plywood to exterior and interior of wall along top and bottom plates with fasteners spaced at 16-inches on center. Secure plywood to studs with 2 fasteners per stud. Provide batt insulation between studs unless otherwise indicated.

D. Shim and adjust perimeter parapet walls as required to provide a plumb and true wall. Provide a longitudinal wall deviation of 1/2-inch maximum in 50 feet.

END OF SECTION 061000

SECTION 072200 - ROOF AND DECK INSULATION

PART 1 - GENERAL

1.1 SUMMARY

A. This section specifies requirements for the following Scope of Work:
   1. Provide tapered and flat thermal insulation and cover board.
   2. Provide insulation crickets, fillers, and cants.

1.2 UNIT PRICES

A. Technical requirements for related Unit Price work are defined in this section. Refer to Division 01 Section "Unit Prices," for quantities to be carried in the Base Bid and provided on the Bid Form.

1.3 SYSTEM DESCRIPTION

A. Tapered Insulation System:
   1. Provide minimum insulation thickness as specified.
   2. The maximum thickness for any given insulation board or layer shall be 3-inches.
   3. Provide minimum average aged R-Value of 30 throughout roof areas.
   4. Utilize existing drain locations as indicated on Drawings.
   5. Provide crickets and saddles between interior drainage points. Cricket width shall be as required to provide positive slope to drain but in no case less than 8-foot wide unless specifically indicated otherwise.
   6. Provide 8-foot by 8-foot sumps at each drain location.

1.4 SUBMITTALS

A. Product Data: For each product indicated in Part 2 of this Section.

B. Manufacturer's full size tapered insulation/cricket drawing with the following:
   1. Outline of roof area with drain and major penetration locations.
   2. Profile of tapered sections to include crickets.
   3. Average R-value of system.

C. Certifications: Provide documentation for requirements described in Paragraph 1.4, Quality Assurance.

1.5 QUALITY ASSURANCE

A. Fire-Test-Response Characteristics: Provide insulation and related materials with fire-test-response characteristics indicated, as determined by testing identical products per ASTM E 84 for surface-burning characteristics, by UL or another testing and inspecting agency acceptable to authorities having jurisdiction. Identify materials with appropriate markings of applicable testing and inspecting agency.

B. Securement: Comply with requirements to achieve wind lift rating of 1-90.

C. Insulation products incorporated into roof system shall be included in roof membrane manufacturer's system warranty. Provide documentation from membrane manufacturer that proposed insulation will be included in required warranty.

D. Tapered insulation plan in Drawings is a conceptual configuration showing basic design intent. Do not interpret Drawings as approved tapered insulation layout plan.

PART 2 - PRODUCTS

2.1 INSULATION BOARDS

A. Roof insulation system materials shall be manufactured by or acceptable to roof membrane manufacturer for inclusion in full system warranty to be issued by manufacturer.

B. Polyisocyanurate: ASTM C 1289, Type II; Class I, Grade 2.
   1. Flat Board Stock: Minimum thickness 3-inches (2 layers).
   2. Tapered System: 1/8-inch per foot slope, to provide consistent slope; minimum thickness of tapered isocyanurate shall be 1/2-inch.
   3. Crickets: 1/2-inch per foot, minimum slope.
   4. Board size, maximum:
      a. For Adhered Installation: 4-feet by 4-feet.

C. Wood Fiberboard: ASTM C 208.
   1. Cants: 4-inch face; 1-1/2-inch thickness.

D. Cover Board: Fiberglass faced, gypsum board with moisture resistant core; ASTM C 1177.
   1. Thickness: 1/2-inch.
   2. DensDeck Prime by Georgia Pacific, or approved substitute.

2.2 MECHANICAL INSULATION

A. Insulation for drain bowls and leader piping: fibrous glass batt type with premolded polyvinyl chloride jackets. Seaming tape for jacket seams shall be as supplied by insulation jacket manufacturer. Minimum thickness 1-inch.

B. Fiberglass batt insulation for use at locations other than hot pipes: Conforming to ASTM C 665, Type II, Class C and E84, I, 3-1/2 inches thick.

C. Fiberglass insulation for use in deck flutes: Unfaced fiberglass insulation, depth of steel deck, cut to fit in deck flutes.

2.3 ACCESSORIES

A. Adhesive: One- or two-part; spray applied polyurethane foam approved by membrane manufacturer.

PART 3 - EXECUTION

3.1 PREPARATION

A. Ensure that surfaces to receive insulation are clean and dry. If necessary, provide equipment to dry surface prior to application. Do not dry with open flames.

B. Remove dirt, debris, and dust from substrates by brooming or vacuuming. Clean dirt and debris from between steel deck ribs.

C. Provide roof insulation boards free of defects, including, but not limited to, broken corners, improperly adhered skins, excessive moisture content (if insulation surface “foams” when hot bitumen is applied, excessive moisture is present), dimensional irregularities, or other defects that may adversely affect replacement roof system. Mark defective insulation boards permanently and remove from site.

3.2 ROOF INSULATION INSTALLATION (LOW SLOPE ROOF AREAS)

A. Adhesive Attachment:
   1. Apply adhesive to substrate using full coverage method in accordance with manufacturer’s requirements and recommendations.
   2. Set boards in adhesive, butting edges tightly. Stagger joints of insulation and coverboard within each layer. Offset joints between layers 12-inches minimum. Fill gaps greater than 1/4-inch.
   3. Walk in boards to ensure adhesion and provide smooth top plane of insulation.

B. Utilize tapered edge strips and filler boards at drain sump locations. Place taper from surrounding insulation system down to drain bowl locations, providing 8-foot by 8-foot minimum drain sumps.

3.3 EXPANSION JOINT INSTALLATION

A. Place fiberglass batt insulation in expansion joints as indicated on Drawings. Do not compress insulation.

B. Provide continuous self-adhering membrane over expansion joint curb. See Division 07 Section "Sheet Metal Flashing and Trim" for self-adhering membrane requirements.

3.4 DECK INSULATION REPLACEMENT

A. Remove any existing fiberglass insulation within the deck flutes that is damaged or wet.

B. Provide new insulation, cut to fit inside flutes, at areas of replacement or missing insulation.

3.5 PIPE INSULATION INSTALLATION

A. Install insulation and jackets at drain bowls as indicated on Drawings, in accordance with manufacturer's printed instructions. Refer to Division 22, "Roof Drains" for additional information

END OF SECTION 072200

SECTION 074243 - COMPOSITE WALL PANELS

PART 1 - GENERAL

1.1 SUMMARY

A. This section specifies requirements for the following Scope of Work:
   1. Provide composite wall with prefabricated extruded aluminum connections.

1.2 PERFORMANCE REQUIREMENTS

A. Structural Performance: Provide metal-faced composite wall panel assemblies capable of withstanding the effects of the following loads and stresses within limits and under conditions indicated, based on testing according to ASTM E 330:
   1. Wind Loads: Determine loads based on the following minimum design wind pressures:
      a. Uniform pressure of 20 lbf/sq. ft., acting inward or outward.
   2. Deflection Limits: Metal-faced composite wall panel assemblies shall withstand wind loads with horizontal deflections no greater than 1/175 of the span at the perimeter and 1/60 of the span anywhere in the panel of the span.

1.3 SUBMITTALS

A. Product Data: For each type of product indicated.

B. Shop Drawings: Show fabrication and installation layouts of metal-faced composite wall panels; details of edge conditions, joints, panel profiles, corners, anchorages, attachment system, trim, flashings, closures, and accessories; and special details. Distinguish among factory, shop, and field-assembled work.

C. Samples: For each type of exposed finish required.

D. Product test reports.

E. Maintenance data.

F. Samples of special warranties.

1.4 WARRANTY

A. Special Warranty: Manufacturer's standard form in which manufacturer agrees to repair or replace components of metal-faced composite wall panel assemblies that fail in materials or workmanship within specified warranty period.
   1. Warranty Period: Five years from date of Substantial Completion.

B. Special Warranty on Panel Finishes: Manufacturer's standard form in which manufacturer agrees to repair finish or replace metal-faced composite wall panels that show evidence of deterioration of factory-applied finishes within specified warranty period.

1. Finish Warranty Period: 20 years from date of Substantial Completion.

1.5 MANUFACTURER INSPECTIONS

A. Inspections: Provide an initial project start-up visitation by the manufacturer. The visit shall be from a qualified representative of the panel manufacturer who will provide a 1 day minimum installation seminar for the proposed products.

PART 2 - PRODUCTS

2.1 TRIM MATERIALS

A. Aluminum Sheet: ASTM B 209, Material shall be provided by the composite panel manufacturer.

1. Surface: Flat finish.
2. Exposed Coil-Coated Finishes:
   a. Two-Coat Fluoropolymer: AAMA 620. Fluoropolymer finish containing not less than 70 percent PVDF resin by weight in color coat.
3. Concealed Finish: Apply pretreatment and manufacturer's standard white or light-colored acrylic or polyester backer finish, consisting of prime coat and wash coat with a minimum total dry film thickness of 0.5 mil.
4. Color: Color shall match the composite wall panels.

B. Panel Sealants: ASTM C 920.

C. Extruded connections and terminations: extruded aluminum meeting ASTM B 221, as provided by the manufacturer. Color shall match the composite panels.

D. Fasteners: Self-tapping screws, bolts, nuts, self-locking rivets and bolts, end-welded studs, and other suitable fasteners designed to withstand design loads. Where necessary, provide exposed fasteners with heads matching color of metal-faced composite wall panels by means of plastic caps or factory-applied coating. Provide EPDM or neoprene sealing washers where required.

2.2 METAL-FACED COMPOSITE WALL PANELS

A. General: Provide factory-formed and assembled, metal-faced composite wall panels fabricated from two metal facings bonded, using no glues or adhesives, to solid, extruded thermoplastic core; formed into profile for installation method indicated. Include attachment system components and accessories required for weathertight system.

1. Fire-Retardant Core: Noncombustible, with the following surface-burning characteristics as determined by testing identical products per ASTM E 84 by UL or another testing and inspecting agency acceptable to authorities having jurisdiction:

a. Flame-Spread Index: 25 or less.

b. Smoke-Developed Index: 450 or less.

2. Products: Subject to compliance with requirements, available products that may be incorporated into the Work include, but are not limited to, the following:

a. Laminators, Inc.

b. Alcan Composites

B. Aluminum-Faced Composite Wall Panels:

1. Panel Facing: .032-inch aluminum, embossed.

2. Panel Backing: .01-inch aluminum, flat.

3. Core: Solid or corrugated thermoplastic material.

4. Exterior Finish: 2-coat fluoropolymer.

a. Color: As selected by Owner from manufacturer's full range.

5. Panel Size: 4ft x 8ft

2.3 ACCESSORIES

A. Wall Panel Accessories: Provide components required for a complete metal-faced composite wall panel assembly including trim, fasciae, mullions, sills, corner units, clips, flashings, sealants, gaskets, fillers, closure strips, and similar items. Match material and finish of metal-faced composite wall panels unless otherwise indicated.

B. Flashing and Trim: As provided by the manufacturer and as required to seal against weather and to provide finished appearance. Locations include, but are not limited to, bases, drips, sills, jambs, corners, endwalls, framed openings, rakes, fascia, parapet caps, soffits, reveals, and fillers. Finish flashing and trim with same finish system as adjacent metal-faced composite wall panels.

C. Attachment Subplates: Continuous 4-inch wide, 26 gauge, galvanized steel or as required by panel manufacturer.

D. Panel Adhesive: Adhesive shall be VOC compliant, silicone glazing sealant such as 896 by Pecora or accepted substitute.

E. Foam tape: 3/8-inch thick adhesive foam tape as provided by the panel manufacturer.

2.4 FABRICATION

A. General: Fabricate and finish metal-faced composite wall panels and accessories at the factory to greatest extent possible, by manufacturer's standard procedures and processes, as necessary to fulfill indicated performance requirements demonstrated by laboratory testing. Comply with indicated profiles and with dimensional and structural requirements.

B. Metal-Faced Composite Wall Panels: Factory form panels in a batch process by laminating each sheet using glues or adhesives between dissimilar materials. Trim and square edges of sheets with no displacement of face sheets or protrusion of core material.

1. Form panel lines, breaks, and angles to be sharp and true, with surfaces free from warp and buckle.
2. Fabricate panels with sharply cut edges, with no displacement of face sheets or protrusion of core material.
3. Fabricate panels with panel stiffeners, as required to comply with deflection limits, attached to back of panels with structural silicone sealant or bond tape.
4. Dimensional Tolerances:
   a. Panel Bow: 0.8 percent maximum of panel length or width.
   b. Squareness: 0.25-inch maximum.

C. Sheet Metal Accessories: Fabricate flashing and trim to comply with recommendations in SMACNA's "Architectural Sheet Metal Manual" that apply to design, dimensions, metal, and other characteristics of item indicated.

PART 3 - EXECUTION

3.1 PREPARATION

A. Miscellaneous Framing: Verify substrate is properly secured and meets the tolerances required. Ensure subplates, hat channels, base angles and other miscellaneous are properly installed in accordance with the specifications and the manufacturer’s requirements.

3.2 METAL-FACED COMPOSITE WALL PANEL INSTALLATION

A. Layout and General Installation. Layout wall panels to provide for butt joints spaced at not less than 8 ft on center. Layout panels to align symmetrically with building reveals and architectural features to the greatest extent possible. Layout panels to provide panels with a minimum length and width of 2-feet at end of vertical and horizontal runs.

B. Subplates: Unless substrate is specifically approved for direct adhesion, provide continuous sheet metal subplates along the long dimension of the panels. Provide rows at top, bottom and center of the panels. Secure subplates with 2 rows of fasteners spaced at 16-inches on center. in a staggerd pattern. Fasteners shall be as specified or recommended and provided by the panel manufacture. Provide prefabricated closures and clips. Secure closures and clips at 8-inches on center. with manufacturer's standard fasteners.

C. Panel Installation: Install extruded “J” channel and inside and outside corners as shown in the detail drawings and as required. Provide continuous, vertically oriented foam tape at 16-24-inches on center. Provide 3-inch diameter adhesive spots, on previously installed subplates where applicable, along the previously installed foam tape or at 16 - 24-inches on center. Provide extruded “H” channel clips at horizontal and vertical panel section joints. Provide full bed of butyl sealant within all extruded sections prior to installing composite panels

3.3 ACCESSORY INSTALLATION

A. General: Install accessories with positive anchorage to building and weathertight mounting and provide for thermal expansion. Coordinate installation with flashings and other components.

1. Install components required for a complete metal-faced composite wall panel assembly including trim, copings, corners, seam covers, flashings, sealants, gaskets, fillers, closure strips, and similar items.

B. Flashing and Trim: Comply with performance requirements, manufacturer's written installation instructions, and SMACNA's "Architectural Sheet Metal Manual." Provide concealed fasteners where possible and set units true to line and level as indicated. Install work with laps, joints, and seams that will be permanently watertight and weather resistant.

3.4 ERECTION TOLERANCES

A. Installation Tolerances: Shim and align metal-faced composite wall panel units within installed tolerance of 1/4-inch in 20-feet, nonaccumulative, on level, plumb, and location lines as indicated and within 1/8-inch offset of adjoining faces and of alignment of matching profiles.

3.5 CLEANING

A. Remove temporary protective coverings and strippable films, if any, as metal-faced composite wall panels are installed unless otherwise indicated in manufacturer's written installation instructions. On completion of metal-faced composite wall panel installation, clean finished surfaces as recommended by panel manufacturer. Maintain in a clean condition during construction.

END OF SECTION 074243

SECTION 075216 - MODIFIED BITUMINOUS MEMBRANE ROOFING

PART 1 - GENERAL

1.1 SUMMARY

A. This Section specifies requirements for the following Scope of Work:
   1. Provide new 2-ply SBS modified bitumen roof membrane, 2-ply SBS modified flashing system, and associated roof system components.
   2. Provide new EPDM membrane at existing covers on plywood enclosures.

1.2 SUBMITTALS

A. Certificates of Compliance: Roof membrane manufacturer's certification that materials are chemically and physically compatible with each other and suitable for inclusion in roof system and are acceptable for warranty specified. Do not submit materials without obtaining membrane manufacturer's written certification. Explicitly identify in writing, difference between manufacturer's written requirements and these specifications, and membrane manufacturer’s approval of proposed asphalt source.

B. Product data: For each product specified in Part 2.

C. Sample: Roof membrane manufacturer’s warranty.

D. Contractor’s letter certifying a minimum of 5-years commercial built-up roofing experience with list of project references, including names and phone numbers.

1.3 QUALITY ASSURANCE

A. Manufacturer Approval:
   1. Installer Qualifications: Approved by manufacturer to install manufacturer’s products.
   2. Source Limitations: To greatest extent possible, obtain auxiliary materials for roofing system from roofing membrane manufacturer. Provide letter of acceptance from manufacturer for auxiliary materials from other sources.
   3. System Approval: Provide statement from manufacturer that specified roof system meets requirements for requested warranty.
   4. Final Roof Inspection: Arrange for roofing system manufacturer's technical personnel to inspect roofing installation on completion and submit report to Architect.
   5. Comply with manufacturer's written instruction and these Specifications for roofing and associated work. Provide skilled tradesmen experienced in installation of 2-ply SBS modified bitumen roofing systems. Foreman shall have a minimum of 5 years of previous SBS membrane installation experience.

6. Identify in writing specific contract requirements that are not approved or warrantable by manufacturer.

B. Minimum quality standards: Comply with NRCA/ARMA publications "Quality Control Guidelines for the Application of Built-up Roofing" and "Quality Control Guidelines for Polymer Modified Bitumen Roofing". Standards within these specifications that exceed NRCA/ARMA shall prevail.

C. Project construction will be monitored and evaluated by the Owner or Owner's Representative for compliance with the Contract Documents.

1.4 GUARANTEES AND WARRANTIES

A. Provide complete roof system, including temporary roof membrane and insulation, to be covered by roof membrane manufacturer's system warranty. Provide materials not included in Specifications where required by manufacturer to obtain requested warranty, without additional charge to Owner.

B. Roof membrane manufacturer's system warranty meeting following minimum criteria:
   1. Coverage to repair damage to system components resulting from leaks due to failure of materials or workmanship.
   2. Non-prorated, non-penal sum (no dollar limit), 25-year warranty period.
   3. Coverage of cost of removal and replacement of wet or damaged insulation due to failure of materials or workmanship.
   4. No exclusion from coverage for damage to roof system from wind gusts less than 55 miles per hour.

C. Contractor's Guarantee: Refer to Division 01 Section "Summary of Work," for Contractor's Guarantee.

PART 2 - PRODUCTS

2.1 PRODUCT PERFORMANCE

A. Provide products fully compatible with substrates and other assembly components. Materials shall be approved for UL Class A fire rating service.

B. Modified bitumen products and systems shall comply with test methods designated in ASTM D 5147-91.

2.2 MANUFACTURERS

A. Manufacturers: Subject to compliance with requirements, provide products by one of following:
   1. Modified Bitumen Roofing:
      a. Garland, Inc.

b. Tremco, Inc.

c. Siplast

d. Johns Manville

2.3 MODIFIED BITUMEN SHEETS

A. Roofing Membrane Base Ply: ASTM D 6164, Grade S, Type I or II, polyester-reinforced, SBS-modified asphalt sheet; smooth surfaced; suitable for application with cold-applied adhesive.

B. Roofing Membrane Cap Sheet: ASTM D 6164 or ASTM D 6162, Grade G, Type I or II, polyester-reinforced or fiberglass polyester-reinforced, SBS-modified asphalt sheet; granular surfaced; fire rated; suitable for application with cold-applied adhesive; white granules.

C. Reinforcing Sheet: As specified in Paragraph 2.3A of this Section.

D. Flashing (Top) Ply: As specified in Paragraph 2.3B of this Section.

2.4 AUXILIARY ROOFING MATERIALS

A. General: Auxiliary materials recommended by roofing system manufacturer for intended use and compatible with roofing membrane.

B. Asphalt Primer: ASTM D 41.

C. Roofing Asphalt: ASTM D 312, Type IV.

D. Cold-Applied Adhesive: Roofing system manufacturer's standard asphalt-based, one- or two-part, asbestos-free, cold-applied SBS modified bitumen adhesive specially formulated for compatibility and use with roofing membrane and base flashings.

E. Sealant: One-part polyurethane, gunnable grade, high performance elastomeric sealant: ASTM C 920, Type S, Grade NS, Class 25, use NT.

F. Self-adhering Membrane: See Division 07 Section “Flashing and Sheet Metal.”

G. Lap Bleed Finish Granules: Ceramic granules sized and colored to match flashing sheet surfacing as supplied by membrane manufacturer.

H. Base flashing adhesive: ASTM D 4586 Type II, SBS-modified, asbestos free, vertical grade.

I. Temporary Foam Night Seal: Two-part polyurethane foam pack: Roofpak by Dow Chemical Company or accepted substitute.

J. Lead Sheet: See Division 07 Section “Flashing and Sheet Metal.”

K. Walkways

1. Cap Sheet Walkways: SBS-modified asphalt sheet; granular surfaced as specified in this Section.

L. Roof / Flashing Coating: See Division 09 Section “Elastomeric Coatings”.

M. EPDM membrane at plywood enclosures: 60-mil; thick EPDM, white, provided by same manufacturer as roofing materials.

2.5 FASTENERS

A. Base flashings/termination bars to wood substrates: Hot-dipped galvanized, annular-threaded roofing nails with 1-inch wide cap-type head and of sufficient length to penetrate wood a minimum of 5/8-inch.

B. Base flashings/termination bars to masonry substrates: 1/4-inch by 2-inch long drive pin anchors with lead sheath and stainless steel pin and 1-inch diameter flat galvanized steel washer.

PART 3 - EXECUTION

3.1 PREPARATION

A. Verify insulation boards are installed smoothly and evenly, and are not broken, cracked, or curled. Insulation shall be roofed over on same day as it is installed.

B. Verify that drains, cants, expansion joints, perimeter blocking, wall flashing substrates, roof penetrating elements and other items necessary to begin installation of membrane are installed.

C. Do not cut or modify bituminous products with solvent or dilutant.

D. Prime masonry, concrete, and sheet metal surfaces in contact with bituminous materials, including sheet metal flanges (both sides) and lead sheet at drain sumps (both sides) with asphaltic primer prior to roofing or flashing installation. Allow primer to dry thoroughly prior to installing bituminous flashings.

E. Do not deliver to site or install a material or system that has not been approved. Remove materials installed without prior approval upon Owner’s request.

F. Surfaces to receive new membrane and flashings shall be clean and thoroughly dry. Should surface moisture such as dew exist, provide necessary equipment to dry surface prior to application. Do not dry with open flames.

G. Take special precautions during cold weather to ensure that adhesive is applied at specified temperatures.

H. Ensure that SBS modified bitumen products are sufficiently warmed prior to use when ambient overnight temperatures are below 40 degrees F.

I. All reinforcing plies, self-adhering membrane envelopes, and base flashings must be installed concurrently with roof membrane installation work, and must be complete and up to date by end of each work week (i.e. Friday or next working day).

3.2 BASE PLY SHEET INSTALLATION

A. Prior to installation, unroll dry membrane and let relax.

B. Sheets shall be laid parallel to longest dimension of tapered area to be roofed and/or perpendicular to slope of area. Application shall start at low point of area working to high point. Laps shall be parallel to slope of short dimension of tapered area and in no case shall laps buck flow of water.

C. Unroll dry membrane on substrate and align with adjacent sheet, providing 3-inch side laps and 6-inch end laps. Stagger end laps of adjacent sheets by 12-inches minimum. Reroll approximately one-half of dry membrane sheet while maintaining alignment.

D. Unroll and embed membrane into adhesive. Apply even pressure with stiff bristle broom directly behind roll to ensure full adhesion. Repeat procedure for the other half of roll.

E. Membrane sheets shall be applied free of wrinkles, creases, fishmouths, or voids. Maintain alignment of sheets utilizing marked lap lines. Should lap lines become misaligned while unrolling, cut sheet and establish a new end lap. Do not attempt to realign a partially adhered membrane roll.

F. Inspect ply sheet application for defects. Cut wrinkles, creases, and fishmouths to relax membrane. Apply a full width strip of base ply membrane over defect lapped a minimum of 3-inches beyond cut. Unbonded lap seams of more than 1/2-inch wide shall be embedded in cold adhesive troweled under unbonded membrane or heat welded.

3.3 REINFORCING PLY INSTALLATION

A. Prior to installation, unroll dry membrane and let relax.

B. Verify that repairs have been made to field membrane in area adjacent to flashing area.

C. Metal flanges shall be treated with a brush coat of asphaltic primer (both sides) and set in full bed of adhesive prior to reinforcing ply installation.

D. Set reinforcing plies at base flashings, metal flanges, and other detailed areas in full, uniform bed of SBS-modified bitumen adhesive applied by trowel at minimum rate of coverage, as recommended by membrane manufacturer.

E. Cut reinforcing plies for horizontal metal flange applications wide enough to provide full coverage of flange and 6-inches onto built-up membrane. Embed end of strip in wet adhesive by applying pressure with dry trowel, working toward metal flange and opposite end of strip. Ensure that membrane is solidly set in adhesive with no voids. Provide 3-inch laps at end of strips.

F. Cut reinforcing plies across width of roll for base flashings at walls, curbs, and other vertical applications to lengths sufficient to provide full coverage to top of vertical element, across cant, and 6-inches onto horizontal surface of built-up membrane. Embed sheet in adhesive by applying pressure with dry trowel at top of cant and working toward top of wall or curb.

G. Starting again at top of cant, apply pressure with trowel, working across face of cant and toward horizontal surface of base ply and embed lower portion of sheet. Ensure that membrane is solidly set in adhesive with no voids or bridging at cant.

H. Provide 3-inch laps and stagger laps. Provide additional reinforcing strip at vertical corners lapped 3-inches onto each vertical side and 3-inches onto horizontal built-up membrane.

3.4 MODIFIED CAP SHEET INSTALLATION

A. Verify that all repairs have been made to the field membrane and reinforcing plies have bee properly installed. Surfaces should be free of sawdust, dirt, insulation debris, and other contaminants prior to starting installation.

B. Cap sheets shall be laid perpendicular to the flow of water starting at the low point of the area and working to the high point. Unroll dry membrane and allow it to relax. Provide 3-inch side laps and 6-inch end laps, and stagger end laps of adjacent cap sheets by 24-inches. Align the granulated side of the sheet over the selvage side of the adjacent sheet. While maintaining alignment, reroll approximately one-half of the dry membrane sheet.

C. Apply adhesive at the rate recommended by the manufacturer. Apply even pressure with stiff bristle broom directly behind roll to ensure full adhesion. Avoid excessive bleed out of more than 1-inch. Distribute loose granules into adhesive bleed out directly behind membrane applicable to ensure complete color uniformity of cap sheet surface. Repeat procedure for the other half of the roll.

D. Membrane cap sheets shall be applied free of wrinkles, creases, fishmouths, or voids. Maintain alignment of sheets utilizing marked lap lines. Should the lap lines become misaligned while unrolling, cut the sheet and establish a new end lap. Do not attempt to realign a partially adhered membrane roll.

E. Inspect cap sheet application for defects. Cut wrinkles, creases, and fishmouths to relax the membrane. Apply a full width strip of cap sheet membrane over the defect in a full bed of cold adhesive and lapped a minimum of 6-inches beyond the cut. Unbonded lap seams of more than 1/2-inch wide shall be embedded in cold adhesive troweled under the unbonded membrane. Reapply granules to repairs as needed.

F. Provide elastomeric coatings. See Division 09 Section “Elastomeric Coatings”.

3.5 SELF-ADHERING MEMBRANE INSTALLATION

A. Condition surfaces with primer at walls and perimeter elements to receive membrane as recommended by membrane manufacturer. Do not prime more than can be covered by sheet installation in one day.

B. Install self-adhering modified bitumen membrane as detailed.

C. Cut modified bitumen into lengths not to exceed 8-feet.

D. Remove release paper backing, set membrane into place, provide minimum 3-inch head laps, and roll down smooth with metal roller.

E. Lap membrane over vertical base flashings and substrate surfaces 3-inches minimum or as indicated in Drawings.

3.6 FLASHING AND STRIPPING SHEET INSTALLATION

A. Verify that repairs have been made to field membrane in area adjacent to cant to receive flashing sheet. Snap chalk line distance of 4-inches minimum from edge of reinforcing ply and on field side of roof.

B. Set flashing sheet at walls, curbs, and other vertical elements in full, uniform bed of adhesive applied at minimum rate of 75 square feet per gallon.

C. Cut flashing sheet across width of roll to provide full coverage to top of vertical element and minimum of 4-inches beyond edge of reinforcing ply on horizontal membrane surface. Embed flashing sheet into wet adhesive by applying pressure starting at top of cant and working toward top of wall or curb. Apply sufficient pressure to ensure full and continuous adhesion of membrane with no air pockets, voids, wrinkles, fishmouths, or bridging. Apply pressure from top of cant working down across face of cant and toward field of roof in similar manner until entire flashing sheet is solidly adhered.

D. Allow 3-inch laps onto adjacent sheets and secure top edge of flashing sheets with continuous termination bar fastened at 6-inches on center.

E. Provide continuous fabric and cement at top edge of flashings.

F. Inspect other laps of completed flashing sheet installation and repair defects with adhesive.

3.7 EPDM MEMBRANE

A. Fully adhere EPDM flashing membrane over substrate. Turn up onto concrete wall and secure with continuous termination bar.

3.8 DRAIN FLASHING

A. Apply base ply over drain bowl flange (beneath clamping ring) as detailed. Trim flush with inside diameter of drain bowl as detailed.

B. Install lead flashing sheet at drains in full bed of adhesive as detailed. Cut single piece of reinforcing ply membrane 39-inches by 39-inches and chalk diagonal lines to establish center of

sheet. Cut hole at center of this target sheet to provide minimum of 1-inch of membrane inside clamping ring.

C. Install target sheet centered over drain bowl in a full bed of modified bitumen adhesive at specified rate and directly to primed lead sheet and 4-inches minimum onto field membrane.

D. Offset cap sheet from edge of drain approximately 6-inches so that no seams are installed under clamping ring.

3.9 WALKWAY PAD

A. Provide membrane protection pads at areas to receive foot traffic, such as roof access hatches, or as otherwise indicated by the Owner. Provide walkway pad beneath new concrete splash blocks.

B. Embed pad in full applications of cold adhesive. “Step in” and broom each piece to ensure total adhesion. Provide 6-inch gap between ends of adjacent pads to allow for drainage.

C. For cap sheets used as walkways, use full width of roll cut in maximum 5-foot lengths. Provide 6-inch gaps between adjacent pieces. Ensure full adhesion.

3.10 TEMPORARY PROTECTION

A. Unfinished perimeter and penetration components: Provide temporary waterstops adequate to prevent moisture intrusion into newly installed work around exposed edges and incomplete flashing locations. Remove temporary materials completely prior to continuing with subsequent work.

B. Tie-ins: Provide temporary waterstops at deck and tie-ins between newly installed and existing membrane as detailed. Inspect tie-ins thoroughly and repair as needed to provide watertight assembly prior to leaving site.

END OF SECTION 075216

SECTION 075420 -THERMOPLASTIC ROOFING (ALTERNATE No. 1)

PART 1 - GENERAL

1.1 SUMMARY

A. This Section specifies requirements for the following Scope of Work:
   1. Provide adhered thermoplastic membrane roofing system.

1.2 PERFORMANCE REQUIREMENTS

A. General Performance: Installed membrane roofing and base flashings shall withstand specified uplift pressures, thermally induced movement, and exposure to weather without failure due to defective manufacture, fabrication, installation, or other defects in construction. Membrane roofing and base flashings shall remain watertight.

B. Material Compatibility: Provide roofing materials that are compatible with one another under conditions of service and application required, as demonstrated by membrane roofing manufacturer based on testing and field experience.

C. FM Approvals Listing: Provide membrane roofing, base flashings, and component materials that comply with requirements in FM Approvals 4450 and FM Approvals 4470 as part of a membrane roofing system, and that are listed in FM Approvals' "RoofNav" for Class 1 or noncombustible construction, as applicable. Identify materials with FM Approvals markings.
   1. Fire/Windstorm Classification: Class 1A-90.
   2. Hail Resistance: MH.

D. Solar Reflectance Index: Not less than 78 when calculated according to ASTM E 1980 based on testing identical products by a qualified testing agent.

E. Energy Performance: Provide roofing system that is listed on the DOE's ENERGY STAR "Roof Products Qualified Product List".

F. Provide roof edge and perimeter sheet metal components complying with ANSI/SPRI ES1 and acceptable to manufacturer for inclusion into roof system.

1.3 SUBMITTALS

A. Product Data: For each type of product indicated.

B. Shop Drawings: For roofing system. Include plans, elevations, sections, details, and attachments to other work.

C. Certifications: Provide documentation for requirements outlined in Paragraph 1.4, Quality Assurance.

D. Sample roof membrane manufacturer's warranty.

E. Contractor's letter certifying a minimum of 5-years commercial roofing experience to include 3 projects of similar size and scope to this project completed in the last 5 years. Provide a list of project references, including names and phone numbers.

F. Laboratory Test Reports for Credit IEQ 4: For adhesives and sealants used inside the weatherproofing system, documentation indicating that they comply with the testing and product requirements of the California Department of Health Services' "Standard Practice for the Testing of Volatile Organic Emissions from Various Sources Using Small-Scale Environmental Chambers."

1.4 QUALITY ASSURANCE

A. Manufacturer Qualifications: A qualified manufacturer that is FM Approvals approved for membrane roofing system identical to that used for this project.

1. Products used in this specified roof system will be produced by manufacturers regularly engaged in the manufacturing of these products with a minimum twenty (20) year history of successful production and product installation.
2. Manufacturer that submits the specified roof system warranty will have been in business for at least twenty (20) years with successful production and product installation of the specific roof system.

B. Roof Installer Qualifications: A qualified firm that is approved, authorized, or licensed by membrane roofing system manufacturer to install manufacturer's product and that is eligible to receive manufacturer's special warranty.

1. Installer will be previously and currently approved by the manufacturer of roof membrane products to be installed under this section.
2. Verification of approved Installer status will be written manufacturer's certification as stated elsewhere and five (5) references from building owners of prior warranted installation of similar roof assembly.
3. References will contain the following: Owner's Name, Owner's Complete Telephone Number, Building Name and Complete Address, Roof Size in Squares, Type of Roof System Installed, Copy of Warranty Issued.
4. Installer will provide written documentation of at least five (5) years of experience in the successful application of the specified roof system.
5. Installer will also provide written documentation of the successful application of a minimum of 100,000 square feet of the specified roof material.
6. Installers will be thoroughly trained and experienced in the necessary crafts. Installers will be made familiar with any unique requirements specified for proper performance of the work in this section.
7. The Installer will supply the resumes of each installer listing work experience with the specified roof system during the past ten (10) years (if requested by the Owner).

C. Roofing Inspections: Cooperate and coordinate with inspectors, testing agencies and manufacturers, in order to facilitate inspection and installation, to include allowance of field sampling. Field sampling will only be performed if moisture intrusion is suspected.

D. Fire-Test-Response Characteristics: Provide membrane roofing materials with fire-test-response characteristics indicated as determined by testing identical products per test method below by UL, FMG, or another testing and inspecting agency acceptable to authorities having jurisdiction.

1. Exterior Fire-Test Exposure: Class A; ASTM E 108, for application and roof slopes indicated.

E. Source Limitations: Obtain components including roof insulation fasteners for membrane roofing system and other specified roofing products from same manufacturer as membrane roofing or approved by membrane roofing manufacturer

1.5 GUARANTEES AND WARRANTIES

A. Provide complete roof system, including insulation, to be covered by roof membrane manufacturer's system warranty. Provide materials not included in Specifications where required by manufacturer to obtain requested warranty, without additional charge to Owner.

B. Roof membrane manufacturer's system warranty meeting following minimum criteria:

1. Coverage to repair damage to system components resulting from leaks due to failure of materials or workmanship.
2. Non-prorated, non-penal sum (no dollar limit), 25-year warranty period.
3. Coverage of cost of removal and replacement of wet or damaged insulation due to failure of materials or workmanship.
4. No exclusion from coverage for damage to roof system from wind gusts less than 55 miles per hour.

1.6 Contractor's Guarantee: Refer to Division 01 Section "Summary of Work," for Contractor's Guarantee.

PART 2 - PRODUCTS

2.1 PVC MEMBRANE ROOFING

A. Fire resistance: Listed by Underwriters' Laboratories as Class A roof system.

B. Wind uplift resistance: Meets attachment requirements for FM Global 1-90

C. TPO MEMBRANE ROOFING

1. Fabric-Reinforced Thermoplastic Polyolefin Sheet: ASTM D 6878, internally fabric or scrim reinforced, uniform, flexible TPO sheet.

a. Manufacturers: Subject to compliance with requirements, provide products by one of the following:

1) Carlisle SynTec Incorporated.
2) Firestone Building Products Company.
3) GAF Materials Corporation.

4) Johns Manville.
5) Versico Incorporated.

b. Thickness: 80 mils, nominal

2.2 AUXILIARY MEMBRANE ROOFING MATERIALS

A. General: Auxiliary membrane roofing materials recommended by roofing system manufacturer for intended use, and compatible with membrane roofing.

B. Sheet Flashing: Manufacturer's standard sheet flashing of same material, type, reinforcement, thickness, and color as sheet membrane.

C. Bonding Adhesive: Manufacturer’s recommended water based or low VOC.

D. Metal Termination Bars: Manufacturer's standard, predrilled stainless-steel or aluminum bars, approximately 1 by 1/8-inch thick; with anchors.

E. Fasteners: Factory-coated steel fasteners and metal or plastic plates complying with corrosion-resistance provisions in FM Approvals 4470, designed for fastening membrane to substrate, and acceptable to membrane roofing system manufacturer.

F. Miscellaneous Accessories: Provide pourable sealers, preformed cone and vent sheet flashings, preformed inside and outside corner sheet flashings, T-joint covers, lap sealants, termination reglets, and other accessories.

2.3 ROOF INSULATION

A. Refer to Division 07 Section “Roof and Deck Insulation.”

2.4 WALKWAYS

A. Flexible Walkways: Factory-formed, nonporous, heavy-duty, slip-resisting, surface-textured walkway pads or rolls, approximately 3/16-inch thick, and acceptable to membrane roofing system manufacturer.

PART 3 - EXECUTION

3.1 PREPARATION

A. Examine substrates, areas, and conditions, for compliance with the following requirements and other conditions affecting performance of roofing system:

1. Verify that roof openings and penetrations are in place and curbs are set and braced and that roof drain bodies are securely clamped in place.
2. Verify that wood blocking, curbs, and nailers are securely anchored to roof deck at penetrations and terminations and that nailers match thicknesses of insulation.

3. Verify all loose gravel has been removed and repairs, as required, have been made to the existing roof assembly.
4. Verify all existing base flashings and provide nailers, stud walls, and plywood as shown in the Drawings.

B. Clean substrate of dust, debris, loose gravel, moisture, and other substances detrimental to roofing installation according to roofing system manufacturer's written instructions. Remove sharp projections.

C. Prevent materials from entering and clogging roof drains and conductors and from spilling or migrating onto surfaces of other construction. Remove roof-drain plugs when no work is taking place or when rain is forecast.

D. Complete terminations and base flashings and provide temporary seals to prevent water from entering completed sections of roofing system at the end of each workday. Remove and discard temporary seals before beginning work on adjoining roofing.

E. Coordinate installing membrane roofing system components so insulation is not exposed to precipitation or left exposed at the end of the workday.

F. Ensure insulation boards have been properly installed and are free of defects including but not limited to, broken corners, excessive moisture, dimensional irregularities and the like. Defective insulation boards shall be marked and immediately removed and replaced.

3.2 ADHERED MEMBRANE ROOFING INSTALLATION

A. Adhere membrane roofing over properly installed insulation and coverboard and install according to membrane roofing system manufacturer's written instructions.
1. Install sheet according to ASTM D 5036.

B. Accurately align membrane roofing and maintain uniform side and end laps of minimum dimensions required by manufacturer. Stagger end laps.

C. Bonding Adhesive: Apply to substrate and underside of membrane roofing at rate required by manufacturer and allow to partially dry before installing membrane roofing. Do not apply to splice area of membrane roofing.

D. In addition to adhering, mechanically fasten membrane roofing securely at terminations, penetrations, and perimeter of roofing. Fasten membrane on vertical surface wherever possible. Verify there is no conduit in the deck flutes prior to fastening.

E. Apply membrane roofing with side laps shingled with slope of roof deck where possible.

F. Seams: Clean seam areas, overlap membrane roofing, and hot-air weld side and end laps of membrane roofing and sheet flashings according to manufacturer's written instructions to ensure a watertight seam installation. Manufacturer’s hot air welding machine will be used for seams in excess of 10 feet.

1. All seams to be hot air welded. Seam overlaps to be a minimum 2-inches wide, or as required by the membrane manufacturer. Welding equipment shall be provided or approved by the membrane manufacturer. All workers intending to use the equipment shall have completed a training course by the manufacturer's representative prior to initiating roof replacement operations. Certification of trained welders is required. Manufacturer to supply confirmation of welder training.
2. Hand welded seams shall be completed in two stages. Warm up equipment for at least one minute prior to welding. Welded seams to be 2-inches wide.
    a. Weld the back edge of the lap with a thin, continuous weld to prevent loss of the hot air during the final weld.
    b. Insert the hot air nozzle into the lap, keeping the welding equipment at a 45 degree angle to the side lap. Once the material starts to flow, apply the 2-inch wide hand roller at a right angle to the welding gun and press lightly. For straight laps, use the 1-1/2-inch wide nozzle. Correct weld speed will complete approximately 20-inch/minute. The hot air weld equipment shall have temperature adjustments to provide this proper speed and weld.
3. All seams to be welded in accordance with manufacturer's instruction. Inspect all completed seams on a daily basis. Inspection shall include, but not limited to, the probing of all field welded seams with a blunted pointed instrument to assure quality of the application and ensure that any operator or equipment deficiencies are immediately resolved.
    a. One (1)-inch wide cross section samples of welded seams shall be taken at least four times daily.
    b. Correct welds display failure from shearing of membrane prior to weld separation.
    c. The Contractor shall patch each patch at no extra charge to Owner.
    d. Each weld will be forwarded to the Owner's representative with approximate roof location and date labeled on each.
4. Provide T-joint covers hot air welded at side and head lap junctures (T-joints).
5. Apply lap sealant to seal cut edges of sheet membrane.
6. Repair tears, voids, and lapped seams in roofing that does not comply with requirements.

G. Spread continuous bed of water cut-off mastic over deck drain flange at roof drains and securely seal membrane roofing in place with clamping ring. Extend membrane 1/2-inch minimum beyond inside face of clamping ring.

3.3 BASE FLASHING INSTALLATION

A. Install sheet flashings and preformed flashing accessories and adhere to substrates according to membrane roofing system manufacturer's written instructions.

B. Apply bonding adhesive to substrate and underside of sheet flashing at required rate and allow to partially dry. Do not apply to seam area of flashing.

C. Flash penetrations and field-formed inside and outside corners with cured or uncured sheet flashing.

D. Clean seam areas, overlap, and firmly roll sheet flashings into the adhesive. Hot-air weld side and end laps to ensure a watertight seam installation.

E. Terminate and seal top of sheet flashings and mechanically anchor to substrate through termination bars.

3.4 WALKWAY INSTALLATION

A. Flexible Walkways: Install walkway products in locations indicated. Heat weld to substrate or adhere walkway products to substrate with compatible adhesive according to roofing system manufacturer's written instructions.

3.5 FIELD QUALITY CONTROL

A. Testing Agency: Owner will engage a qualified firm to perform 3rd party monitoring and inspections.

B. Final Roof Inspection: Arrange for roofing system manufacturer's technical personnel to inspect roofing installation on completion and submit report to Owner.

C. Repair or remove and replace components of membrane roofing system where inspections indicate that they do not comply with specified requirements.

END OF SECTION 075420

SECTION 076000 - FLASHING AND SHEET METAL

PART 1 - GENERAL

1.1 SUMMARY

A. This Section specifies requirements for the following Scope of Work:
   1. Provide perimeter and penetration sheet metal flashings and components at locations indicated on the drawings and as required to properly terminate the roof system.

1.2 SUBMITTALS

A. Product Data:
   1. For each item specified in Part 2 of this Section.
   2. Color charts for coated metals.

B. Shop Drawings: Show layouts, profiles, shapes, seams, dimensions, and details for fastening, joining, supporting, and anchoring sheet metal flashing and trim.

C. Certifications: Perimeter sheet metal assembly must be in compliance with IBC requirements, specifically ANSI/SPRI ES-1 protocol.

1.3 QUALITY ASSURANCE

A. Installation procedures shall be in accordance with the industry standards and codes indicated in Division 01 Section “Summary of Work” and those indicated in this Section.

B. Sheet Metal Flashing and Trim Standard: Comply with SMACNA's "Architectural Sheet Metal Manual" unless more stringent requirements are specified or shown on Drawings.

C. Sheet Metal Standard: Comply with NRCA “Roofing and Waterproofing Manual, Fifth Edition.” Conform to dimensions and profiles shown unless more stringent requirements are indicated.

D. Mockups: Build mockups to demonstrate aesthetic effects and set quality standards for fabrication and installation. Include seams, attachments, underlayment, and accessories.
   1. Parapet Cap

1.4 WARRANTY

A. Special Warranty on Finishes: Manufacturer's standard form in which manufacturer agrees to repair finish or replace sheet metal flashing and trim that shows evidence of deterioration of factory-applied finishes within 25-years from date of Substantial Completion.

PART 2 - PRODUCTS

2.1 SHEET METALS

A. Aluminum Sheet: ASTM B 209, Alloy 3004, temper not less than H14; provide with manufacturer's strippable plastic film. Where exposed metal finishes are required to match composite wall panels, material shall be supplied or recommended by the composite metal wall panel manufacturer. Required finish:

1. High-Performance Organic Finish: Thermocured system containing not less than 70 percent polyvinylidene fluoride (Kynar/Hylar) resin by weight; complying with AAMA 2604; color as selected by Owner from standard colors.

B. Stainless-Steel Sheet: ASTM A 240, Type 304, No. 2D finish.

C. Lead Sheet: ASTM B 749, Type L51121, copper-bearing lead sheet.

2.2 ACCESSORIES

A. General: Provide materials and types of fasteners, solder, welding rods, protective coatings, separators, sealants, and other miscellaneous items as required for complete sheet metal flashing and trim installation.

B. Self-Adhering Membrane: High temperature self-adhering, SBS modified bitumen membrane with poly-surface and release-paper backing, minimum 40-mil thickness, designed for a minimum melting temperature of 220 deg F such as Ice & Water Shield HT by W.R. Grace, Lastobond Shield HT by Soprema, Metshield by MetFab, or accepted substitute.

C. Sealant Tape: Pressure-sensitive, 100 percent solids, polyisobutylene compound sealing tape with release-paper backing. Provide permanently elastic, nonsag, nontoxic, nonstaining tape.

D. Exposed elastomeric Sealant: ASTM C 920, Type S, Grade NS, Class 25, Use A. Use an elastomeric polyurethane polymer sealant.

E. Concealed sealant for metal-to-metal connections: ASTM C 1311, single-component, butyl (polyisobutylene) rubber sealant, heavy bodied for hooked-type expansion joints with limited movement.

F. Bituminous Coating to separate incompatible metals: Cold-applied asphalt mastic, SSPC-Paint 12, compounded for 15-mil dry film thickness per coat.

G. Band Clamps: Stainless steel, including screw-adjustable clamps; 1/2-inch wide.

H. Flux: muriatic acid based with zinc.

I. Solder: ASTM B 32, 50% block tin and 50% pig lead; manufactured for use with stainless steel or copper.

J. Splash Block: Precast concrete formed to divert water in one direction. Splash block shall be in smooth forms with bottom edges rounded or chamfered to prevent abrasion.

K. Cold Applied Adhesive: See Division 07 Section “Modified Bituminous Membrane Roofing.”

L. Termination Bar: Manufacturer's standard, predrilled aluminum bars, approximately 1 by 1/8-inch thick with sealant edge. Holes shall be predrilled at 6-inches on center.

2.3 FASTENERS

A. Sheet metal to wood blocking connections (concealed securement): No. 12 annular threaded Series 300 stainless steel nails minimum 1-1/2-inches long.

B. Sheet metal to wood blocking connections and mechanical unit securement (exposed securement): Self-drilling, self-tapping, Number 10, stainless steel hex-washer-head screws, 1-1/2-inch long, with metal-capped EPDM washers.

C. Sheet metal to masonry wall connections: 1/4-inch diameter, concrete/masonry screws of sufficient length to penetrate substrate 1-1/2-inch minimum. Provide metal capped EPDM washers at exposed locations.

D. Sheet metal fascia to wood connections: 1-inch long, #10, Series 300 stainless steel pan head screws.

2.4 FABRICATION – GENERAL

A. General: Fabricate sheet metal flashing and trim to comply with IBC and recommendations in SMACNA and NRCA that apply to design, dimensions, metal, and other characteristics of item indicated. Obtain field measurements for accurate fit before shop fabrication.

B. Fabricate sheet metal flashing and trim without excessive oil canning, buckling, and tool marks and true to line and levels indicated, with exposed edges folded back to form hems.

1. Seams for Aluminum: Fabricate nonmoving seams with flat-lock seams. Form seams and seal with epoxy seam sealer. Rivet joints for additional strength.
2. Seams for Other Than Aluminum: Fabricate nonmoving seams in accessories with flat-lock seams. Tin edges to be seamed, form seams, and solder.

C. Sealed Joints: Form nonexpansion but movable joints in metal to accommodate elastomeric sealant to comply with SMACNA recommendations.

D. Expansion Provisions: Where lapped expansion provisions in Work cannot be used, form expansion joints of intermeshing hooked flanges, not less than 1-inch deep, filled with butyl sealant concealed within joints.

E. Provide concealed fasteners and expansion provisions where possible on exposed-to-view sheet metal flashing and trim, unless otherwise indicated.

F. Provide cleats and attachment devices from same material as accessory being anchored or from compatible, noncorrosive metal, and in thickness not less than that of metal being secured.

2.5 FABRICATION SCHEDULE

A. PVDF Coated Aluminum (.040-inch)
   1. Parapet Caps
   2. Closures
   3. Fascia Metal
   4. Scupper Face Plate
   5. Covers

B. Aluminum (.050-inch)
   1. Cleats

C. Stainless Steel (26 gauge)
   1. Reglet Counterflashing (Roof to Wall)
   2. Surface-Mounted Counterflashing
   3. Expansion Joint Covers
   4. Expansion Joint Counterflashing Cleat
   5. Clips (Expansion Joint, Counterflashing)
   6. Vent Pipe Sleeves and Caps
   7. Scupper Sleeve

PART 3 - EXECUTION

3.1 PREPARATION

A. Verify that substrate and anchorage materials to receive sheet metal flashings are properly secured and aligned, without gaps, lumps, or offsets that may distort metal.

B. Install underlayment at roof edges, parapets, curbs, and similar transitions, and as shown on Drawings.

3.2 INSTALLATION, GENERAL

A. Comply with these specifications and applicable industry standards to include the IBC, NRCA, and SMACNA, whichever is more stringent.

B. General: Anchor sheet metal flashing and trim and other components of Work securely in place, with provisions for thermal and structural movement. Use fasteners, solder, welding rods, protective coatings, separators, sealants, and other miscellaneous items as required to complete sheet metal flashing and trim system.

1. Torch cutting of sheet metal flashing and trim is not permitted.

C. Metal Protection: Where dissimilar metals will contact each other or corrosive substrates, protect against galvanic action by painting contact surfaces with bituminous coating or by other permanent separation as recommended by fabricator or manufacturers of dissimilar metals.

D. Install exposed sheet metal flashing and trim without excessive oil canning, buckling, and tool marks.

E. Install sheet metal flashing and trim true to line and levels indicated. Provide uniform, neat seams with minimum exposure of solder, welds, and butyl sealant.

F. Install sheet metal flashing and trim to fit substrates and to result in watertight performance. Verify shapes and dimensions of surfaces to be covered before fabricating sheet metal.

G. Expansion Provisions: Provide for thermal expansion of exposed flashing and trim. Space movement joints at maximum of 10-feet, with no joints allowed within 18-inches of corner or intersection. Where lapped expansion provisions cannot be used or would not be sufficiently watertight, form expansion joints of intermeshing hooked flanges, not less than 1-inch deep, filled with butyl sealant concealed within joints.

H. Fasteners: Use fasteners of sizes that will penetrate substrate not less than 1-1/4-inches for nails and not less than 3/4-inch for wood screws.

I. Non-moving seams and joints on non-solderable metal shall be interlocked, filled with sealant, and riveted, unless otherwise indicated.

J. Seal joints as required for watertight construction. Use elastomeric sealant for exposed conditions. Use butyl sealant for hidden conditions.

K. Provide sheet metal closure components at transitions to rising walls and similar changes in plane for edge metal, parapet caps, expansion joint covers, and other termination flashings. Fully crimp and seal closures to continuous blind nailed cleats.

L. Soldered Joints: Comply with SMACNA and CDA requirements. Use conduction soldering methods.
   1. Clean surfaces to be soldered, removing oils and foreign matter. Smooth irregularities and round edges. Pretin edges of sheets to be soldered to width of 1-1/2-inches except where pretinned surface would show in finished Work.
   2. Apply flux to surfaces to receive solder. Remove oxides and other impurities from joint.
   3. Position and immobilize parts to be soldered. Heat parts above fluid temperature of solder. Draw solder into joint, creating 1-inch wide lap. Allow to cool before moving parts.
   4. Remove flux and acid by cleaning with neutralizing agent.

M. Fabricate sheet metal components to the dimensions and shapes shown on the Drawings.

3.3 METAL COMPONENT INSTALLATION

A. Securement Clips

1. Securement clips shall be 6-inches long and 2-inches wide.
2. Secure clips to substrate with specified fasteners. Space clips 12-inches on center.
3. Bend clips minimum of 1-inch over bottom drip edge of counterflashing and crimp loosely.

B. Cleats

1. Form cleats with 3/4-inch kicks, bent out at maximum angle of 45 degrees to the vertical surface. Height of cleat shall be 3-3/4-inches unless otherwise indicated on Drawings.
2. Secure continuous cleats to wood blocking with fasteners spaced at 6-inches on center.
3. Provide 1/4-inch gap between cleat sections. Offset from joints in cover metal being secured.

C. Sheet Metal Transition Closures

1. Extend sheet metal 4-inches minimum vertically up wall at sheet metal-to-wall transitions.
2. Set sheet metal in full bed of butyl mastic and secure using appropriate screws with EPDM washers spaced at 4-inches along centerline of vertical portions.
3. Fold vertical portion down over fasteners. Provide bead of sealant along sheet metal at wall.

D. Parapet Caps

1. Provide self-adhering membrane over parapet.
2. Fabricate parapet cap to dimensions and shapes shown on Drawings and to fit snugly over parapet and membrane flashings.
3. Secure to continuous cleat on the exterior face. At locations where cleat will be fastened to existing metal wall panels, provide continuous butyl tape and pop rivets at 6-inches on center.
4. Provide 1-1/4-inch high standing seams. Hook cap on cleats and crimp. Fasten interior face of parapet cap at 6-inches on center with specified fasteners. Provide butyl mastic in each standing seam. Fold seams over to form standing seam and fold corners. Provide shop fabricated end and corner sections minimum 18-inches long.

E. Cover

1. Secure cleat to existing metal wall panels with pop rivets at 6-inches on center. Set cleat in butyl tape. Fasten at top edge to wood blocking with specified fasteners at 6-inches on center.
2. Hook cover on cleats and crimp. Fasten top edge of cover to wood blocking or plywood at 6-inches on center.

F. Fascia

1. Secure fascia cleat to existing metal wall panels with pop rivets at 6-inches on center. Set cleat in continuous butyl tape. Hook fascia onto cleat and provide 3-inch lap joints filled with sealant.
2. Secure fascia along top edge at +/- 16-inches on center through slotted holes.

3. Do not secure upper edge metal cleat through fascia.

G. Surface-Mounted Counterflashing and Clips

1. Install securement clips as previously specified.
2. Provide counterflashing with 3-inch minimum sealant-filled section laps. Secure counterflashing with clips.
3. Secure counterflashing to wall with fasteners spaced at 12-inches on center maximum.
4. Provide minimum 1/2-inch bend at top edge. Provide continuous sealant along edge.

H. Reglet Counterflashing

1. Install securement clips as previously specified.
2. Sawcut reglet into concrete to depth of 1-1/2-inches and width of 3/8-inch. Clean loose particles from reglet and fill reglet with butyl sealant.
3. Form horizontal flange of counterflashing with "V" bend up at 45 degree angle and not less than 3/4-inch long. Provide bend with spring action within reglet.
4. Insert counterflashing into reglet and secure with lead wedges spaced at 8-inches on center. Provide minimum of 3 wedges per length of counterflashing. Ensure that counterflashing and wedges are driven in sufficiently to provide proper sealant coverage. Install sealant above exterior edge of counterflashing.

I. Expansion Joint Assembly

1. Install fiberglass batt insulation and continuous backer rod within expansion joint curb as detailed, supported by loop of membrane if required.
2. Install self-adhering modified bitumen across curb as indicated on Drawings. Provide 4-inch laps and extend down curb.
3. Form counterflashing/cleats to allow 1-inch minimum movement and to counterflash base flashings 4-inches minimum. Secure to top of wood blocking with fasteners spaced at 6-inches on center. Provide 3-inch-wide lap joints.
4. Form expansion joint cover to fit onto cleat, providing loose locked but snug fit.
5. Roof-to-roof expansion joints: Provide 1-1/4-inch high standing seams, at metal section joints filled with sealant.

J. Pipe Sleeves, Caps, and Hoods

1. Form pipe sleeves with integral flanges with locked and soldered seams. Provide hemmed edges of deck flanges as indicated on Drawings.
2. Prior to installing sheet metal sleeves on vent pipes, verify that vent pipes have been extended to 12-inches minimum above finished roof surfaces.
3. Prime flanges and set in bed of adhesive.
4. Secure deck flanges to substrate as specified.
5. Flash flanges in accordance with membrane requirements and Drawings.
6. Install vent caps in full beds of sealant to fit snugly over existing vent pipes and new vent pipe sleeves as indicated on Drawings.

K. Scupper

1. Cut existing wood blocking and metal wall panels to create opening at dimensions shown on Drawings.
2. Provide sheet metal scuppers with locked and soldered seams.
3. Provide continuous 3-inch wide flanges on exterior and interior of parapet. Lock and solder flanges watertight.
4. Set exterior flanges in full beds of sealant.
5. Counterflash upper exterior flange of scupper box with sheet metal counterflashing set in sawcut reglet. Extend counterflashing 3-inches beyond scupper opening on both sides.
6. Set interior flanges in adhesive. Firmly secure flanges, fastening at 3-inches on center.
7. Flash interior flanges in accordance with membrane requirements and Drawings.
8. Provide face plate, color matched to the parapet. Pop rivet face plate to the scupper sleeve at 6-inches on center with color matched pop rivets.

3.4 CLEANING

A. Remove scrap metal, burrs, fasteners, and related debris from roof daily. Take precautions to prevent damage to roof membrane and flashings.

END OF SECTION 076000

SECTION 077200 - ROOF ACCESSORIES

PART 1 - GENERAL

1.1 SUMMARY

A. This Section specifies requirements for the following Scope of Work:
   1. Provide roof accessory components as indicated on the Drawings.

1.2 SUBMITTALS

A. Product Data: For each type of roof accessory indicated.

B. Shop Drawings: Show fabrication and installation details for roof accessories.

C. Manufacturer Installation Instructions: For each product in Part 2.

1.3 QUALITY ASSURANCE

A. Comply with manufacturer's recommendations and requirements.

B. Verify locations, dimensions, and substrate conditions before installation.

PART 2 - PRODUCTS

2.1 ROOF HATCHES

A. Roof Hatches: Roof hatches shall have insulated double-wall lids and frames with integral deck mounting flange and lid frame counterflashing. Curbs and lids shall have fully welded corners. Units shall be provided with continuous weathertight perimeter gasketing.
   1. Type and Size: Single-leaf lid, 30 by 36-inches
   2. Curb and Lid Material: Aluminum (0.0907-inch)
   3. Lid Insulation: Concealed fiberglass
   4. Curb Insulation: Fiberboard insulation
   5. Curb Height: 12-inches.
   6. Hardware: Stainless-steel spring latch with turn handles, butt- or pintle-type hinge system, and padlock hasps inside and outside.
   7. Provide OSHA compliant fixed hatch railing system with self-locking gate. Attachment shall be directly to hatch.

2.2 SPLASH BLOCK

A. High-density concrete, natural color; 12-inches by 30-inches; to divert water in one direction.

PART 3 - EXECUTION

3.1 INSTALLATION

A. General
   1. Coordinate installation of roof accessories with installation of roof deck, roof insulation, flashing, roofing membranes, penetrations, equipment, and other construction to ensure that combined elements are weatherproof and watertight.
   2. Install roof accessory items according to construction details in NRCA's "Roofing and Waterproofing Manual," unless otherwise indicated.
   3. Separation: Separate metal from incompatible metal or corrosive substrates, including wood, by coating concealed surfaces, at locations of contact, with bituminous coating or providing other permanent separation.
   4. Operational Units: Test-operate units with operable components. Clean and lubricate joints and hardware. Adjust for proper operation.

B. Hatch Curb Installation
   1. Provide continuous wood blocking to match insulation height.
   2. Existing interior ladder at hatch location, not specifically indicated to be replaced, shall be repositioned and extended to accommodate new roof system. Ladder shall provide for rungs not more than 12-inches above finished floor and the top rung level with the bottom of the new hatch.

C. Splash Block
   1. Provide walkway pad or protection membrane below splash block.

3.2 CLEANING

A. Clean exposed surfaces according to manufacturer's written instructions. Touch up damaged metal coatings.

END OF SECTION 077200

SECTION 099100 - PAINTING

PART 1 - GENERAL

1.1 SUMMARY

A. This Section specifies requirements for following Scope of Work:
   1. Prepare, prime, and paint interior surfaces of existing steel framing and new built-up steel framing components affected by interior construction.

1.2 SPECIAL JOB CONDITIONS

A. Coating products shall not contain: asbestos, zinc chromate, strontium chromate, or lead.

B. Building will be occupied and in use during construction. Contractor shall take all precautions necessary to protect persons and property. Scheduling of work shall be coordinated with Owner's representative.

C. Provide all necessary temporary protection and barriers to segregate work area and prevent damage to adjacent areas.

1.3 PRODUCT DELIVERY, STORAGE, AND HANDLING

A. Paints shall be delivered in sealed containers that legibly show designated name, formula or specification number, batch number, color, quantity, date of manufacture, manufacturer's formulation number, manufacturer's directions including any warnings and special precautions, and name of manufacturer.

B. Paints and thinner shall be stored in accordance with manufacturer's written directions and as a minimum stored off ground, under cover, with sufficient ventilation to prevent build-up of flammable vapors and at temperatures between 40 and 95 degrees F.

1.4 ENVIRONMENTAL CONDITIONS

A. Unless otherwise recommended by paint manufacturer, ambient temperature shall be between 45 and 95 degrees F when applying coatings.

1.5 SUBMITTALS

A. Manufacturer's Instructions
   1. Paint application instructions
   2. Paint color charts for Owner's selection of color

3. Material Safety Data Sheets (MSDS)

B. Schedule for Paint application

C. Applicators Qualifications consisting of evidence showing satisfactory application of proposed paint at a minimum of two sites. Give names and contacts at sites.

PART 2 - PRODUCTS

2.1 PAINT, GENERAL

A. Material Compatibility:

1. Provide materials for use within each paint system that are compatible with one another and substrates indicated, under conditions of service and application as demonstrated by manufacturer, based on testing and field experience.
2. For each coat in a paint system, provide products recommended in writing by manufacturers of topcoat for use in paint system and on substrate indicated.

2.2 PRIMER AND PAINT

A. Primer for interior existing and new structural steel framing MPI #107: Rust-inhibitive water based primer by Sherwin Williams or accepted substitute. Primer shall be lead and chromate-free.

B. Paint for interior existing and new structural steel framing MPI #143 (flat) Latex interior, flat by Sherwin Williams, or accepted substitute.

C. Colors shall match existing adjacent surfaces. Color of undercoats shall vary slightly from color of next coat.

D. Paints containing lead in excess of 0.06 percent by weight of total nonvolatile content (calculated as lead metal) shall not be used.

E. Paints shall comply with applicable state and local laws enacted to insure compliance with Federal Clean Air Standards and shall conform to restrictions of local air pollution control authority.

F. Primers and paint materials shall be low odor/V.O.C.

2.3 ACCESSORIES

A. Paint application shall be performed by brush or roller only. No spraying shall be permitted unless approved in advance by Owner.

B. Masking tapes, sheets, and sealants shall be compatible with materials they are applied to and shall not leave stains on adjacent surfaces.

2.4 PAINT SCHEDULE

A. Interior existing and new structural steel framing:
   1. Primer
      a. Number of Coats: One, dry film thickness, 1.7 mils
   2. Paint
      a. Number of Coats: Two, dry film thickness, 1.3 mils per coat.

PART 3 - EXECUTION

3.1 GENERAL

A. Prior to surface preparation and coating applications, remove mask or otherwise protect all adjacent surfaces. Repair or replace items damaged in course of painting to Owner's satisfaction.

B. Before applying succeeding coats, undercoats shall be completely integral and shall perform function for which they are specified. Properly prepare and touch up all scratches, abrasions or other disfigurements and remove any foreign matter before proceeding with following coat. All spot-priming or painting shall be featheredged into adjacent areas to produce smooth monolithic appearance.

3.2 PREPARATION

A. Clean all surfaces to be painted as required to remove dust and dirt. Sand as necessary to properly prepare surfaces to receive primer and paint.

B. Wipe off dust and grit from properly prepared surfaces prior to applying primer.

C. Remove dirt, scale, loose coatings and particles, grease, oil, disintegrated coatings, and other substances deleterious to coating performance for component substrates in accordance with SSPC SP-1, Power Tool Cleaning, to remove rust and loose coatings as well as to remove glossy surfaces of existing paint films.

D. Ferrous Surfaces: Ferrous surfaces including those that have been shop-coated, shall be solvent-cleaned. Surfaces that contain loose rust, loose mill scale, and other foreign substances shall be cleaned mechanically with hand tools according to SSPC SP 2, power tools according to SSPC SP 3. Shop-coated ferrous surfaces shall be protected from corrosion by treating and touching up corroded areas immediately upon detection.

E. Previously Painted Surfaces: Previously painted surfaces specified to be removed to complete the work, or damaged during construction shall be thoroughly cleaned of all grease, dirt, dust or other foreign matter. Slick surfaces shall be roughened. Damaged areas such as, but not limited to, nail holes, cracks, chips, and spalls shall be repaired with suitable material to match adjacent undamaged areas. Edges of chipped paint shall be feather edged and sanded smooth. New, proposed coatings shall be compatible with existing coatings. If existing surfaces are glossy, gloss shall be reduced.

3.3 APPLICATION

A. Comply with manufacturer's written instructions and recommendations in "MPI Architectural Painting Specification Manual" applicable to substrates indicated.

B. Apply products in accordance with manufacturer’s instructions. Rate of application of coating shall be as specified but shall not exceed that as recommended by paint manufacturer for purpose of surface involved.

C. Allow sufficient drying time between coats as recommended by coating manufacturer.

D. Refinish entire sections if areas which have been previously repaired are rejected.

3.4 CLEANING

A. Repair brush marks, scratches, abrasions, and minor surface defects in coatings finish in accordance with manufacturer’s printed instructions. Finish of repaired surfaces shall be uniform and free from blemishes and variations in color and surface texture.

END OF SECTION 099100

SECTION 099653 - ELASTOMERIC COATINGS

PART 1 - GENERAL

1.1 SUMMARY

A. This Section specifies requirements for the following Scope of Work:

1. Provide coating on newly installed roof system including flashings and incidental locations indicated on the Drawings.

1.2 PERFORMANCE REQUIREMENTS

A. Provide elastomeric coating systems with the following properties as determined by test methods indicated:

1. Elongation: Not less than 100 percent with a tensile strength of 1.3 MPA and not less than 88 percent recovery after 1 hour and 90 percent recovery after 24 hours when tested according to ASTM D 2370 using parameters established by MPI 113.
2. Accelerated Weathering: No cracking, peeling, blistering, chalking, or visual deterioration after 1000 hours when tested according to procedures in ASTM G 155.
3. Low-Temperature Flexibility: No crack formation when tested according to ASTM D 1737.
4. Wind-Driven Rain Resistance: No water penetration according to procedures in FS TT-C-555.

1.3 SUBMITTALS

A. Product Data: For each elastomeric coating system specified. Include crack fillers, block fillers, and primers.

1. Material List: An inclusive list of required coating materials. Indicate each material and cross-reference the specific coating, finish system, and application. Identify each material by manufacturer's catalog number and general classification.
2. Manufacturer's Information: Technical information including label analysis and instructions for handling, storing, and applying each coating material.

B. Qualification Data: For Applicator.

C. Material Certificates: For each elastomeric coating material, signed by manufacturers.

D. Product Test Reports: Based on evaluation of comprehensive tests by a qualified testing agency for each elastomeric coating material indicating compliance of elastomeric coatings with requirements based on comprehensive testing within the last two years of current product formulations.

1.4 QUALITY ASSURANCE

A. Applicator Qualifications: A firm or individual experienced in applying elastomeric coating systems similar in material and extent to those indicated for this Project, whose work has resulted in applications with a record of successful in-service performance.

B. Source Limitations: Obtain crack fillers and other undercoat materials from same manufacturer as finish coats.

1.5 DELIVERY, STORAGE, AND HANDLING

A. Deliver materials to Project site in manufacturer's original, unopened packages and containers bearing manufacturer's name and label.

B. Store materials not in use in tightly covered containers in a well-ventilated area at a minimum ambient temperature of 7 deg C (45 deg F). Maintain storage containers in a clean condition, free of foreign materials and residue.

1.6 WARRANTY

A. Elastomeric Coating Warranty: Manufacturer's standard form in which manufacturer agrees to repair or replace elastomeric coatings that fail within specified warranty period. Failures include, but are not limited to, water penetration through the coating.

B. Warranty Period for Elastomeric Coatings: Ten (10) years from date of Substantial Completion.

1.7 EXTRA MATERIALS

A. Furnish extra elastomeric coating materials from same production run as materials applied and in quantities described below. Package materials in unopened, factory-sealed containers for storage and identify with labels describing contents. Deliver extra materials to Contracting Officer's Representative.

1. Quantity: Furnish Contracting Officer's Representative with 2 gal. of elastomeric coating materials applied.

PART 2 - PRODUCTS

2.1 ELASTOMERIC COATING MATERIALS, GENERAL

A. Material Compatibility: Provide crack fillers, block fillers, primers, elastomeric finish-coat materials, and related materials that are compatible with one another and substrates indicated under conditions of service and application, as demonstrated by manufacturer based on testing and field experience.

B. Material Quality: Provide manufacturer's best-quality elastomeric coating materials that are factory formulated, comply with requirements in FS TT-C-555, and are recommended by manufacturer for the application indicated. Material containers not displaying manufacturer's product identification are not acceptable.

1. Proprietary Names: Use of manufacturer's proprietary product names to designate colors or materials is not intended to imply that products named are required to be used to the exclusion of equivalent products of other manufacturers. Furnish manufacturer's material data and certificates of performance of proposed substitutions.

C. Colors and Textures: Manufacturer's standard smooth texture. Color shall be white.

2.2 CRACK FILLERS

A. Crack Fillers: Factory-formulated acrylic emulsion crack fillers compatible with substrate and finish-coat materials indicated.

2.3 PRIMERS

A. Factory-formulated, alkali-resistant, acrylic-latex primer as recommended by coating manufacturer.

2.4 ELASTOMERIC FINISH-COAT MATERIALS

A. Smooth Elastomeric Finish: Smooth, factory-formulated, 100 percent acrylic elastomeric coating with a minimum of 50% solids by volume and a minimum SRI of 80 such as Eterna-Seal 8101 by Truco, Inc. or RCS 5000 by Lapollo Industries, Inc.

PART 3 - EXECUTION

3.1 EXAMINATION

A. Examine substrates and conditions, with Applicator present, for compliance with requirements for coating application. Comply with procedures specified in PDCA P4.

1. Proceed with coating application only after unsatisfactory conditions have been corrected and surfaces are thoroughly dry.
2. Start of coating application will be construed as Applicator's acceptance of surface conditions.

B. Coordination of Work: Review other Sections in which primers are provided to ensure compatibility of total system for various substrates. On request, furnish information on characteristics of finish materials to ensure use of compatible primers.

3.2 PREPARATION

A. Cleaning: Before applying coatings or other surface treatments, clean substrates of substances that could impair bond of coating systems. Remove oil and grease before cleaning.

1. Schedule cleaning and coating application so dust and other contaminants from cleaning process will not fall on wet, newly coated surfaces.

B. Surface Preparation: Clean and prepare surfaces to be coated according to manufacturer's written instructions for particular substrate conditions and as specified.

C. Material Preparation: Mix and prepare materials according to coating manufacturer's written instructions.

1. Maintain containers used in mixing and applying elastomeric coatings in a clean condition, free of foreign materials and residue.
2. Stir materials before application to produce a mixture of uniform density. Stir as required during application. If surface film forms, do not stir film into material. If necessary, remove film and strain coating material before using.
3. If manufacturer permits thinning, use only thinners recommended by manufacturer, and only within recommended limits.

3.3 COATING SCHEDULE

A. Provide elastomeric coating systems according to the following schedule:

1. All Surfaces:
   a. Primer: 1 coat if required by the coating manufacturer.
   b. Finish Coats: 2 coats.

3.4 APPLICATION

A. General: Apply elastomeric coatings according to manufacturer's written instructions. Use applicators and techniques best suited for substrate and type of material being applied.

1. Do not paint over conditions detrimental to formation of a durable coating film, such as dirt, rust, scale, grease, moisture, and scuffed surfaces.
2. Provide finish coats compatible with primers used.

B. Scheduling Coating: Apply first coat to surfaces that have been cleaned, pretreated, or otherwise prepared for painting as soon as practicable after preparation and before subsequent surface deterioration.

1. Insert restrictions on use of spray equipment to suit Project.
2. Number of coats and film thickness required are same regardless of application method. Do not apply succeeding coats until previous coat has cured as recommended by manufacturer.
3. If undercoats or other conditions show through final coat, apply additional coats until coating film is of uniform finish, color, and appearance. Ensure that surfaces, including edges, corners, crevices, welds, and exposed fasteners, receive a dry film thickness equivalent to that of flat surfaces.

4. Allow sufficient time between successive coats to permit proper drying. Do not recoat surfaces until coating has dried to where it feels firm, does not deform or feel sticky under moderate thumb pressure, and where application of another coat does not cause undercoat to lift or lose adhesion.

C. Application Procedures: Apply elastomeric coatings by brush, roller, or spray according to manufacturer's written instructions.

1. Brushes: Use brushes best suited for material being applied.
2. Rollers: Use professional-quality quick-release rollers of carpet, velvet back, or high-pile sheep's wool covers with a 25 mm to 31 mm (1- to 1-1/4-inch) nap as recommended by manufacturer for material and texture required.
3. Spray Equipment: airless spray equipment shall not be used.

D. Minimum Coating Thickness: Apply each material no thinner than manufacturer's recommended spreading rate. Provide total dry film thickness as recommended by manufacturer but in no case less than .3 mm (.012-inch).

E. Block Fillers: Apply block fillers to concrete masonry block at a rate to ensure complete coverage with pores filled.

F. Prime Coats: If recommended by manufacturer, apply a primer to material being coated before applying finish coats.

G. Brush Application: Brush out and work brush coats into surfaces in an even film. Eliminate cloudiness, spotting, holidays, laps, brush marks, runs, sags, ropiness, or other surface imperfections. Neatly draw glass lines and color breaks.

H. Roller Application: Keep cover wet at all times; do not dry roll. Work in sections. Lay on required amount of material, working material into grooves and rough areas; then level material, working it into surface.

I. Completed Work: Match approved samples for color, texture, and coverage. Remove, refinish, or recoat work not complying with specified requirements.

3.5 CLEANING

A. Cleanup: At end of each workday, remove rubbish, empty cans, rags, and other discarded materials from Project site.

3.6 PROTECTION

A. Protect work of other trades from damage whether being coated or not. Correct damage by cleaning, repairing, replacing, and recoating as approved by Contracting Officer's Representative. Leave in an undamaged condition.

B. Provide "Wet Paint" signs to protect newly coated finishes. Remove temporary protective wrappings provided by others to protect their work after completing coating operations.

1. After construction activities of other trades are complete, touch up and restore damaged or defaced coated surfaces. Comply with procedures specified in PDCA P1.

END OF SECTION 099653

SECTION 221426.13 – ROOF DRAINS

PART 1 - GENERAL

1.1 SUMMARY

A. This Section specifies requirements for the following Scope of Work:
   1. Provide drain bowls, strainers, clamping rings, underdeck clamps, and pipe joint connections at all existing roof drain locations.
   2. Clear roof drain systems from roof level to the point where the leaders exit the building to achieve a free-flowing system.

1.2 SUBMITTALS

A. Product Data: For each type of product indicated.

1.3 PROJECT CONDITIONS

A. Existing roof drain outlet diameters vary. Contractor shall confirm conditions prior to ordering materials.

B. The plumbing work shall be coordinated with roof work in such a manner that drain bowl assemblies are installed concurrently with the roofing and that no interior portions of the building are left exposed to the elements at the end of a day's work. Install replacement drain bowl assemblies before new roofing is in place.

C. The Contractor shall provide all rooftop protection for new and existing roofs.

D. All plumbing work shall be performed by a licensed plumber in accordance with the International Plumbing Code (IPC).

PART 2 - PRODUCTS

2.1 ROOF DRAIN COMPONENTS

A. Roof drain: “Series 21500” by Josam Company, coated cast iron with bottom outlets, large-sump style, with wide roof flanges. Outlet diameters shall match the existing leader pipe diameters.

B. Drain strainers: Bronze dome of suitable size and configuration to be installed on the new drain bowl assemblies.

C. Clamping rings: Non-puncturing type, with integral gravel stops, either coated cast iron or stainless steel, sized to match the drain bowls. Bolts, nuts, and washers required for securement of clamping rings to drain bowls shall be stainless steel.

D. Underdeck clamps: Coated cast iron, provided by the drain bowl manufacturer for application beneath roof decks.

2.2 ACCESSORIES

A. Leader pipe: Schedule 40 PVC pipe. Pipe and connections shall be sized to tie into existing leader piping.

B. Drain bowl to leader pipe connections: 4 band, no hub, neoprene connections.

C. Pipe Connections: Solvent welded connections.

D. Steel plate for drain bowl locations shall be minimum 24 gauge hot dipped galvanized plate as provided by the drain bowl manufacturer. Plate shall be a minimum size of 16-inches by 16-inches with central hole of suitable size to receive new drain bowl.

E. Insulation for drain bowls and leader piping: Fibrous glass batt type with premolded PVC jackets. Insulation shall be minimum 1-inch thick.

PART 3 - EXECUTION

3.1 PREPARATION

A. The Owner shall be notified at least 72 hours prior to all underdeck work. All materials, equipment and daily clean-up shall be the responsibility of the Contractor.

B. All flashing-in of the roof drains and membrane repairs as a result of the plumbing work shall be the responsibility of and provided for by the Contractor.

C. The Contractor is cautioned to investigate all existing conditions and materials of construction. All replacement items must be completely compatible with and match the existing system.

D. Comply with Division 1 GENERAL REQUIREMENTS for preparation, protection and clean-up of interior and exterior work areas.

3.2 DRAIN BOWL ASSEMBLY INSTALLATION

A. Install new roof drains such that the bowl flange with clamping ring and integral gravel stop are level (see Detail Drawings for assembly position).

B. Provide manufacturer supplied, prefabricated, galvanized steel plate over opening. Mechanically attach plate to steel deck with specified fasteners, 2 per side.

C. Make drain to leader connections watertight and of proper strength using no hub connections.

D. Install drain bowl insulation and PVC jackets. Join sections with tape or other methods indicated by the manufacturer. Extend insulation to the first elbow or 2-feet.

E. Drain components shall be completed and flashed in the same day's operation.

F. Check all drain joints with a water test once the roofing and flashing are completed.

3.3 CLEANING OF DRAINAGE SYSTEM

A. Once the new roof system has been installed, clear all roof drain leader piping and underground leaders of debris and clogs such that the system is free-flowing.

B. The Contractor shall clear the existing leader pipe with rooter-type equipment from the roof deck level to the point where the drain pipes exit the building.

3.4 WATER TESTS

A. Perform water tests on roof drain assemblies, including leader piping, and on gutter assemblies and scuppers. Using 3/4-inch garden hose, run water into the drainage components for thirty minutes. Inspect all drainage components for leakage and repair as required. Inform Owner of test findings.

END OF SECTION 221426.13

SECTION 230510 - MECHANICAL/ELECTRICAL GENERAL REQUIREMENTS

PART 1 - GENERAL

1.1 SUMMARY

A. This Section specifies requirements for the following Scope of Work:
   1. Remove and reinstall existing electrical conduit as required to augment existing trusses.
   2. Mechanical disconnection, extension, shortening, and/or reconnection shall be performed in accordance with the International Mechanical Code.
   3. Electrical disconnection, extension, shortening, and/or reconnection shall be performed in accordance with the National Electrical Code.
   4. Plumbing work shall be performed in accordance with the International Plumbing Code.
   5. Details, not shown or specified but necessary for proper installation and operation shall be included within the work as though specified herein.

PART 2 - PRODUCTS (Not Used)

PART 3 - EXECUTION

3.1 GENERAL

A. Mechanical, electrical, and associated work shall be performed by licensed tradesman and shall comply with the applicable code requirements.

B. Wherever possible match the existing mechanical and electrical components; replace in kind when made necessary by roofing or structural steel operations.

C. Lengthening and installation of additional connections for ducts, conduits, control wiring, condensate pipes and similar mechanical and electrical work made necessary by roof replacement and structural steel work shall be performed by the Contractor.

D. Handle, store, and protect equipment and materials to prevent damage before and during installation.

END OF SECTION 230510

ROOF REPLACEMENT

THOMAS JEFFERSON MIDDLE SCHOOL GYMNASIUM

125 SOUTH OLD GLEBE ROAD
ARLINGTON, VIRGINIA 22204

IFB# 17FY20

PREPARED FOR

ARLINGTON PUBLIC SCHOOLS
2770 SOUTH TAYLOR STREET
ARLINGTON, VIRGINIA 22206

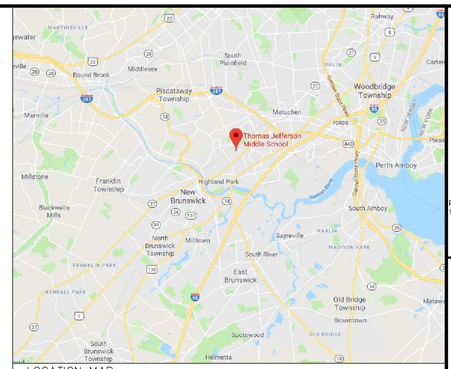

LOCATION MAP

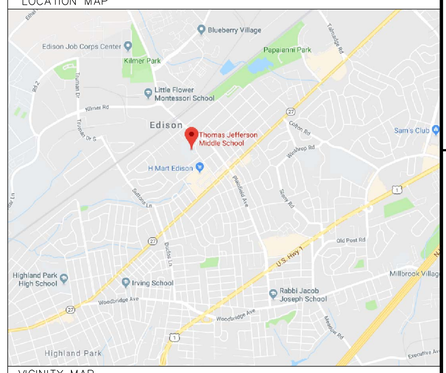

VICINITY MAP

DRAWING NO	TITLE
G-001	COVER SHEET
G-002	STANDARD ABBREVIATIONS, LEGEND, SYMBOLS AND GENERAL NOTES
G-003	TYPICAL FLASHING CONFIGURATIONS
C-101	SITE PLAN
A-100	OVERALL ROOF AREA AND CONCEPTUAL TAPERED INSULATION PLAN
A-101	PARTIAL ROOF AREA PLAN
A-102	PARTIAL ROOF AREA PLAN
A-501	DETAILS – EXISTING CONDITIONS AND NEW CONSTRUCTION
A-502	DETAILS – NEW CONSTRUCTION
A-503	SHEET METAL ISOMETRIC DETAILS
S-100	FRAMING PLAN AND STRUCTURAL DETAILS

CODE ANALYSIS AND SUMMARY

APPLICABLE CODES

- 2015 INTERNATIONAL BUILDING CODE (IBC) WITH LOCAL AMENDMENTS
- 2015 INTERNATIONAL MECHANICAL CODE (IMC) WITH LOCAL AMENDMENTS
- 2015 INTERNATIONAL PLUMBING CODE (IPC) WITH LOCAL AMENDMENTS
- 2011 NATIONAL ELECTRIC CODE (NEC) WITH LOCAL AMENDMENTS
- 2014 NATIONAL FIRE PROTECTION ASSOCIATION (NFPA) WITH LOCAL AMENDMENTS
- 2015 INTERNATIONAL ENERGY CONSERVATION CODE (IECC) WITH LOCAL AMENDMENTS
- 2015 VIRGINIA CONSTRUCTION CODE (VCC) WITH LOCAL AMENDMENTS

APPLICABLE GUIDELINES

- NATIONAL ROOFING CONTRACTORS ASSOCIATION (NRCA)
- AMERICAN SOCIETY OF HEATING, REFRIGERATION AND AIR-CONDITIONING ENGINEERS (ASHRAE)
- AMERICAN SOCIETY OF CIVIL ENGINEERS (ASCE)

ROOF DESIGN PARAMETERS

BASIC WIND SPEED – 120 MPH

DESIGN WIND PRESSURES:
ZONE 1 – 25.9 PSF
ZONE 2 – 43.5 PSF
ZONE 3 – 65.4 PSF

SUMMARY OF WORK:

- REMOVE EXISTING ROOF SYSTEM (GYMNASIUM ONLY) DOWN TO EXISTING ROOF DECK AND PROVIDE NEW 2-PLY MEMBRANE.
- ALTERNATE NO. 1: PROVIDE NEW THERMOPLASTIC ROOF MEMBRANE AND INSULATION ASSEMBLIES OVER EXISTING ROOF ASSEMBLY.
- AUGMENT EXISTING INTERIOR STRUCTURAL STEEL ROOF FRAMING WITH NEW STRUCTURAL STEEL FRAMING WHERE INDICATED.

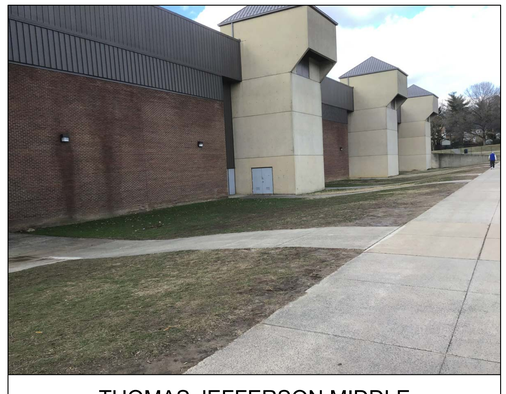

THOMAS JEFFERSON MIDDLE SCHOOL GYMNASIUM

GALE

Gale Associates, Inc.
Engineers Architects Planners

1122 Kenilworth Drive, Suite 206
Towson, Md 21204-2143
P 443-279-4500 F 443-279-4560
www.gainc.com

Boston Baltimore Orlando

This drawing and the design and construction features disclosed are proprietary to Gale Associates, Inc. and shall not be altered or reused in whole or part without the express written permission of Gale Associates, Inc. Copyright ©2019

PROJECT
ROOF REPLACEMENT
THOMAS JEFFERSON MIDDLE SCHOOL GYMNASIUM
125 SOUTH OLD GLEBE ROAD
ARLINGTON, VIRGINIA 22204

OWNER
ARLINGTON PUBLIC SCHOOLS
2770 SOUTH TAYLOR STREET
ARLINGTON, VIRGINIA 22206

NO.	DATE	DESCRIPTION	BY
1	2/26/2020	CD SUBMISSION	MLF

PROJECT NO.	670622
CADD FILE	670622 G0x
DESIGNED BY	SLB
DRAWN BY	MLF
CHECKED BY	SJB
DATE	2/26/2020
DRAWING SCALE	NONE

GRAPHIC SCALE

IF BORDER IS LESS THAN 40" x 28" USE GRAPHIC SCALES

SHEET TITLE

COVER SHEET

DRAWING NO.

G-001

D:\670622\02 DESIGN\670622 G0X.DWG - 2/26/2020 11:00:02 AM - < MLF >

STANDARD LEGEND

NOTE: NOT ALL SYMBOLS NECESSARILY USED

- EXPANSION JOINT
- PARAPET
- DOWNSPOUT
- H — ACCESS HATCH
- MAIN ENTRANCE
- VENT PIPE
- ROOF DRAIN
- OVERFLOW SCUPPER
- STRUCTURAL SLOPE

STANDARD ABBREVIATIONS

NOTE: NOT ALL ABBREVIATIONS NECESSARILY USED

AIR CONDITIONER	AC
AREA DRAIN	AD
ALUMINUM	AL
BASE FLASHING	BF
BUILDING	BLDG
BRICK MASONRY UNIT	BMU
BUILT-UP ROOFING	BUR
COUNTERFLASHING	CF
CLADDING	CLDG
CLEAT	CLT
COMPLETE JOINT PENETRATION	CJP
CONCRETE MASONRY UNIT	CMU
CONCRETE	CONC
CONTINUOUS	CONT
COVER	CV
CEMENTITIOUS WOOD FIBERBOARD	CWF
DOWNSPOUT	DS
ELEVATION	EL
ETHYLENE PROPYLENE DIENE MONOMER	EPDM
EQUAL	EQ
EXTERIOR INSULATION FINISH SYSTEM	EIFS
EXPANSION JOINT	EJ
EXISTING	EX
EXTERIOR	EXT
FIRE RETARDANT TREATED	FRT
FASTENER	FSTNR
FOOT	FT
FULLY ADHERED	FA
GLAZING	GL
GYPSUM	GYP
INCH	IN
INTERIOR	INT
INSULATION	INSUL
LADDER	LAD
LIGHTNING	LTNG
LIGHTWEIGHT	LT WT
LIGHTWEIGHT CONCRETE	LWC
MAXIMUM	MAX
MECHANICAL	MECH
MEMBRANE	MEMB
MINIMUM	MIN
METAL	MTL
NOT APPLICABLE	NA
NOT IN CONTRACT	NIC
NUMBER	NO
NOMINAL	NOM
NOT TO SCALE	NTS
ON CENTER	O.C.
OPPOSITE HAND	OH
PHOTOVOLTAIC	PV
PLATE	PL
PLYWOOD	PLYWD
ROOF DRAIN	RD
ROUGH OPENING	RO
ROOF TOP UNIT	RTU
SELF-ADHERING MODIFIED BITUMEN	SAMB
SIMILAR	SIM
SLEEVE	SLV
SHEET METAL	SM
STANDING SEAM (ROOF)	SS
STAINLESS STEEL	SST
STEEL	STL
STRUCTURAL	STRUCT
TO REMAIN	TR
TYPICAL	TYP
VERIFY IN FIELD	VIF
WOOD	WD
WINDOW	WDW
WOODFIBER BOARD	WF

STANDARD SYMBOLS

NOTE: NOT ALL SYMBOLS NECESSARILY USED

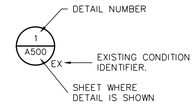

DETAIL INDICATORS

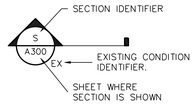

SECTION INDICATOR

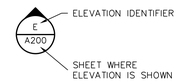

ELEVATION INDICATOR

STANDARD HATCH PATTERNS

NOTE: NOT ALL HATCH PATTERNS NECESSARILY USED

- FIBERGLASS BATT INSULATION
- CELLULAR FOAM INSULATION
- CEMENTITIOUS WOODFIBER BOARD
- CONCRETE
- GYPSUM BOARD/DECK
- ISOCYANURATE INSULATION
- WOOD FIBERBOARD INSULATION
- FIBERGLASS ROOF INSULATION

GENERAL NOTES

DEMOLITION NOTES

1. THE INFORMATION SHOWN ON THE DRAWINGS HAS BEEN COMPILED FROM VARIOUS SOURCES, AND MAY NOT REFLECT THE ACTUAL CONDITIONS AT THE TIME OF CONSTRUCTION.
2. THE BUILDING WILL REMAIN OCCUPIED DURING CONSTRUCTION. THE CONTRACTOR SHALL SCHEDULE AND EXECUTE WORK TO AVOID INTERRUPTIONS TO BUILDING OPERATIONS.
3. CONTRACTOR SETUP LOCATIONS SHALL BE AS INDICATED BY THE OWNER DURING THE PRE CONSTRUCTION MEETING.
4. THE CONTRACTOR SHALL BE RESPONSIBLE FOR COVERING ALL INTERIOR ITEMS INCLUDING FLOORS AND EQUIPMENT PRIOR TO DEMOLITION. ONCE REMOVAL IS COMPLETE FOR THE DAY, THE PLASTIC COVERINGS SHALL BE REMOVED AND THE INTERIOR AREAS CLEANED. CLEANING SHALL INCLUDE, BUT NOT BE LIMITED TO, SWEEPING OF FLOORS AND DUST REMOVAL FROM THE TOPS OF LIGHT FIXTURES AND EQUIPMENT WHERE ACCESSIBLE.
5. THE CONTRACTOR SHALL REPORT DETERIORATED OR UNSUITABLE ROOF DECK OR SUBSTRATE COMPONENTS TO THE OWNER PRIOR TO PERFORMING ROOFING INSTALLATION WORK.
6. REMOVE AND DISPOSE OF EXISTING ROOF SYSTEM AND ALL ASSOCIATED MATERIALS DOWN TO THE STRUCTURAL DECK UNLESS OTHERWISE INDICATED ON THE DETAIL DRAWINGS TO REMAIN. REMOVE AND DISPOSE OF ALL ITEMS TO INCLUDE DRAINS, WOOD BLOCKING AND APPURTENANCES SCHEDULED TO BE REMOVED.
7. PROVIDE TEMPORARY OVERHEAD PROTECTION AT THE MAIN ENTRANCE AND AT OTHER LOCATIONS AS NECESSARY TO PROVIDE UNINTERRUPTED ACCESS TO BUILDING.
8. REMOVALS SHALL BE PERFORMED IN ACCORDANCE WITH THE SUBMITTED AND APPROVED REMOVAL PLAN, THE DETAIL DRAWINGS AND SPECIFICATIONS.
9. REMOVE ALL ABANDONED EQUIPMENT, CONDUIT AND CURBS AND ENCLOSE OPENINGS UNLESS SPECIFICALLY INDICATED TO REMAIN.
10. REFER TO C-101 FOR DESIGNATED STAGING AREA AND CONTRACTOR ACCESS. ACCESS TO OTHER ROOF AREAS WILL BE PROHIBITED. ACCESS TO THE INTERIOR WILL BE PROVIDED ONLY AS REQUIRED FOR INSTALLATION OF INTERIOR PROTECTION OR PLUMBING WORK.
11. CONTRACTOR SHALL BE RESPONSIBLE FOR RESTORING ALL GROUNDS AND ACCESS ROADS THAT ARE DAMAGED AS A RESULT OF THE WORK. PROVIDE TEMPORARY PROTECTION ON GROUNDS AND AT ACCESS ROADS AS REQUIRED.
12. INDEPENDENT TESTING OF MATERIALS FOR ASBESTOS INDICATES THAT THERE ARE MATERIALS SCHEDULED FOR DEMOLITION THAT CONTAIN ASBESTOS . REMOVE AND DISPOSE OF ASBESTOS CONTAINING MATERIALS AS SPECIFIED IN ACCORDANCE WITH THE SPECIFICATIONS AND FEDERAL, STATE AND LOCAL REGULATIONS.

REPLACEMENT NOTES

1. FOR THE SAKE OF CLARITY, EACH INDIVIDUAL DETAIL ON THE ROOF PLANS HAS NOT BEEN INDICATED. EXISTING AND NEW DETAILS HAVE BEEN INDICATED FOR TYPICAL COMPONENTS AT RANDOM LOCATIONS.
2. COMPONENTS SHOWN ON THE DETAIL DRAWINGS SHALL BE NEW UNLESS SPECIFICALLY INDICATED AS EXISTING.
3. ITEMS OF CONSTRUCTION SHALL BE IN ACCORDANCE WITH LOCAL, STATE AND FEDERAL REGULATIONS APPLICABLE TO THE PROJECT.
4. FOR THE SAKE OF CLARITY, SECUREMENT FASTENERS ARE NOT SHOWN ON THE DRAWING. REFER TO SPECIFICATIONS FOR FASTENER TYPES AND SPACING.
5. ANY DISCREPANCIES ON THE DRAWINGS NOTED BY THE CONTRACTOR SHALL BE BROUGHT TO THE OWNERS ATTENTION PRIOR TO BID SUBMISSION.
6. ITEMS OF CONSTRUCTION SHALL BE 100% WATERTIGHT ON A DAILY BASIS. REMOVE ONLY AS MUCH MATERIAL AS CAN BE MADE WATERTIGHT ON THE SAME DAY OF WORK.
7. FLASHING AND STRIPPING CONFIGURATIONS SHOWN ON THE ARCHITECTURAL DRAWING SHEETS ARE PROVIDED TO CONVEY GENERAL FLASHING AND STRIPPING CONFIGURATIONS. REFER TO THE GENERAL SHEETS AND THE SPECIFICATIONS FOR SPECIFIC CONFIGURATIONS AND REQUIREMENTS.
8. DETAILS NOT DEPICTED SHALL BE CONSTRUCTED IN A MANNER CONSISTENT WITH THE DETAIL DRAWINGS.
9. IF THERE IS A POTENTIAL HAZARDOUS MATERIAL ENCOUNTERED DURING THE COURSE OF WORK THAT IS NOT IDENTIFIED IN THE CONTRACT DOCUMENTS, THE CONTRACTOR WILL STOP WORK IMMEDIATELY AND CONTACT THE OWNER WHO IS TO MAKE A DETERMINATION IF THE MATERIAL IS HAZARDOUS.
10. ALL DUMPSTERS MUST BE AT LEAST 15 FEET FROM THE BUILDING UNLESS EMPTIED AT THE END OF EACH WORK DAY.
11. MATERIALS MAY NOT BE STORED CLOSER THAN 15 FEET FROM BUILDINGS AND MAY NOT BE PLACED IN FRONT OF EXITS OR ANY FIRE PROTECTION EQUIPMENT. REFUELING OF GASOLINE POWERED EQUIPMENT WILL NOT BE PERMITTED ON THE ROOF. GASOLINE MUST BE STORED IN UL LISTED AND APPROVED CONTAINERS.

GALE

Gale Associates, Inc.
Engineers Architects Planners

1122 Kenilworth Drive, Suite 206
Towson, Md 21204-2143
P 443-279-4500 F 443-279-4560
www.gainc.com

Boston Baltimore Orlando

This drawing and the design and construction features disclosed are proprietary to Gale Associates, Inc. and shall not be altered or reused in whole or part without the express written permission of Gale Associates, Inc.
Copyright©2019

PROJECT

ROOF REPLACEMENT
THOMAS JEFFERSON MIDDLE SCHOOL GYMNASIUM
125 SOUTH OLD GLEBE ROAD
ARLINGTON, VIRGINIA 22204

OWNER

ARLINGTON PUBLIC SCHOOLS
2770 SOUTH TAYLOR STREET
ARLINGTON, VIRGINIA 22206

NO.	DATE	DESCRIPTION	BY
1	2/26/2020	CD SUBMISSION	MLF

PROJECT NO.	670622
CADD FILE	670622 G0x
DESIGNED BY	SLB
DRAWN BY	MLF
CHECKED BY	SJB
DATE	2/26/2020
DRAWING SCALE	NONE

GRAPHIC SCALE

IF BORDER IS LESS THAN 40" x 28" USE GRAPHIC SCALES

SHEET TITLE

STANDARD ABBREVIATIONS, LEGEND, SYMBOLS AND GENERAL NOTES

DRAWING NO.

G-002

D:\670622\02 DESIGN\670622 G00.DWG - 2/26/2020 11:00:06 AM - < MLF >

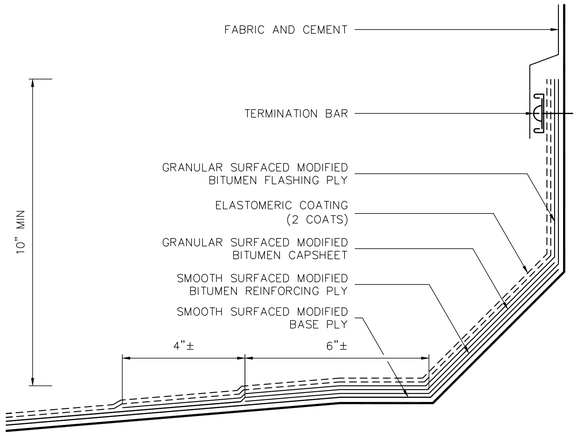

1 TYPICAL 2-PLY MODIFIED BASE FLASHING
SCALE: 6" = 1'

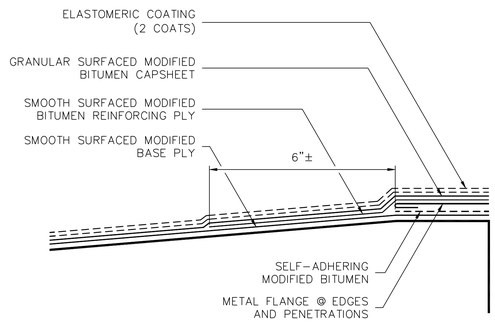

2 TYPICAL 2-PLY MODIFIED STRIP FLASHING
SCALE: 6" = 1'

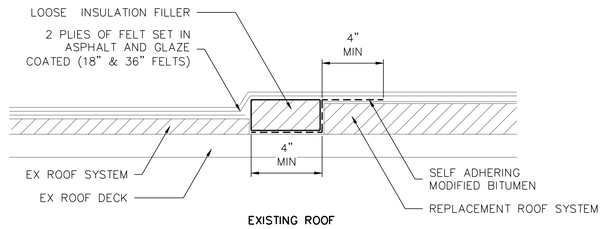

3 TYPICAL TEMPORARY TIE-IN CONSTRUCTION
SCALE: NOT TO SCALE

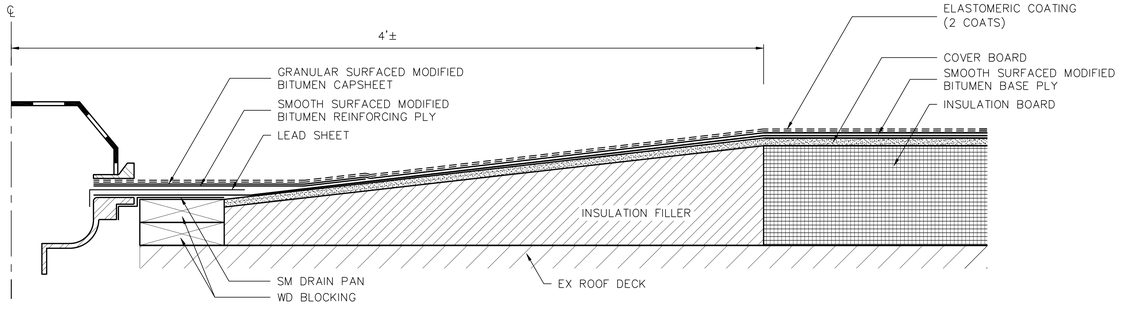

4 TYPICAL DRAIN SUMP
SCALE: 3" = 1'

GALE

Gale Associates, Inc.
Engineers Architects Planners

1122 Kenilworth Drive, Suite 206
Towson, Md 21204-2143
P 443-279-4500 F 443-279-4560
www.gainc.com

Boston Baltimore Orlando

This drawing and the design and construction features disclosed are proprietary to Gale Associates, Inc. and shall not be altered or reused in whole or part without the express written permission of Gale Associates, Inc.
Copyright©2019

PROJECT
ROOF REPLACEMENT
THOMAS JEFFERSON MIDDLE SCHOOL GYMNASIUM
125 SOUTH OLD GLEBE ROAD
ARLINGTON, VIRGINIA 22204

OWNER
ARLINGTON PUBLIC SCHOOLS
2770 SOUTH TAYLOR STREET
ARLINGTON, VIRGINIA 22206

NO.	DATE	DESCRIPTION	BY
1	2/26/2020	CD SUBMISSION	MLF

PROJECT NO.	670622
CADD FILE	670622 G0x
DESIGNED BY	SLB
DRAWN BY	MLF
CHECKED BY	SJB
DATE	2/26/2020
DRAWING SCALE	AS NOTED

GRAPHIC SCALE

IF BORDER IS LESS THAN 40" x 28" USE GRAPHIC SCALES

SHEET TITLE

TYPICAL FLASHING CONFIGURATIONS

DRAWING NO.

G-003

D:\670622\02 DESIGN\670622 G00.DWG - 2/26/2020 11:00:06 AM - < MLF >

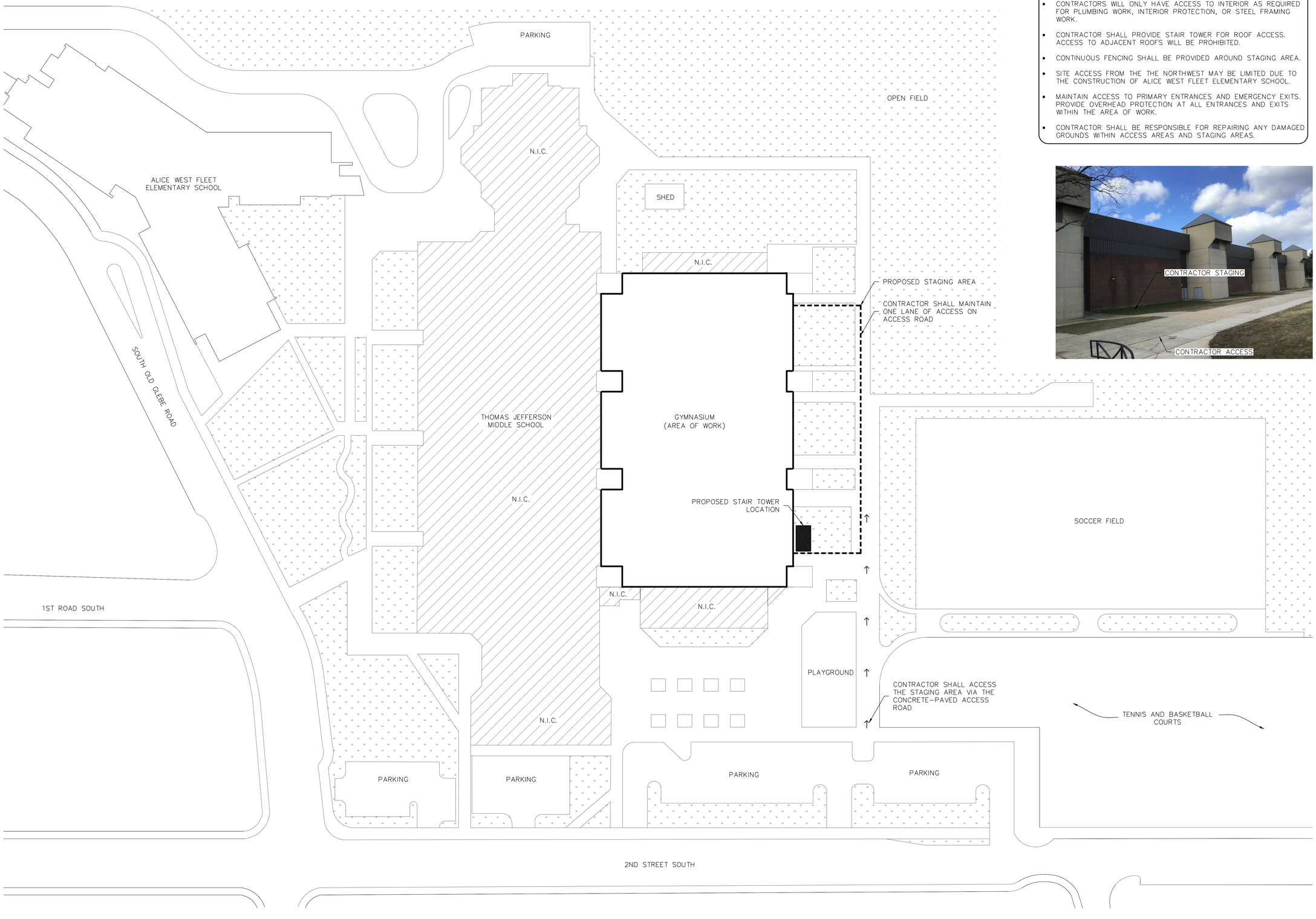

GENERAL NOTES

- CONTRACTORS WILL ONLY HAVE ACCESS TO INTERIOR AS REQUIRED FOR PLUMBING WORK, INTERIOR PROTECTION, OR STEEL FRAMING WORK.
- CONTRACTOR SHALL PROVIDE STAIR TOWER FOR ROOF ACCESS. ACCESS TO ADJACENT ROOFS WILL BE PROHIBITED.
- CONTINUOUS FENCING SHALL BE PROVIDED AROUND STAGING AREA.
- SITE ACCESS FROM THE THE NORTHWEST MAY BE LIMITED DUE TO THE CONSTRUCTION OF ALICE WEST FLEET ELEMENTARY SCHOOL.
- MAINTAIN ACCESS TO PRIMARY ENTRANCES AND EMERGENCY EXITS. PROVIDE OVERHEAD PROTECTION AT ALL ENTRANCES AND EXITS WITHIN THE AREA OF WORK.
- CONTRACTOR SHALL BE RESPONSIBLE FOR REPAIRING ANY DAMAGED GROUNDS WITHIN ACCESS AREAS AND STAGING AREAS.

A C101 SITE PLAN
SCALE: NOT TO SCALE

PLAN NORTH

GALE
Gale Associates, Inc.
Engineers Architects Planners
1122 Kenilworth Drive, Suite 206
Towson, Md 21204-2143
P 443-279-4500 F 443-279-4560
www.gainc.com
Boston Baltimore Orlando

This drawing and the design and construction features disclosed are proprietary to Gale Associates, Inc. and shall not be altered or reused in whole or part without the express written permission of Gale Associates, Inc.
Copyright©2019

COMMONWEALTH OF VIRGINIA
STEVEN J. BOHREN
Lic. No. 36187
PROFESSIONAL ENGINEER

PROJECT
ROOF REPLACEMENT
THOMAS JEFFERSON MIDDLE SCHOOL GYMNASIUM
125 SOUTH OLD GLEBE ROAD
ARLINGTON, VIRGINIA 22204

OWNER
ARLINGTON PUBLIC SCHOOLS
2770 SOUTH TAYLOR STREET
ARLINGTON, VIRGINIA 22206

NO.	DATE	DESCRIPTION	BY
1	2/26/2020	CD SUBMISSION	MLF

PROJECT NO.	670622
CADD FILE	670622 A1x
DESIGNED BY	SLB
DRAWN BY	MLF
CHECKED BY	SJB
DATE	2/26/2020
DRAWING SCALE	N.T.S.

GRAPHIC SCALE
0 4' 8' 16'
IF BORDER IS LESS THAN 40" x 28" USE GRAPHIC SCALES

SHEET TITLE
SITE PLAN

DRAWING NO.
C-101

O:\670622\02 DESIGN\670622 A1X.DWG - 2/26/2020 11:00:13 AM - < MLF >

EXISTING ROOF SYSTEM CROSS SECTION

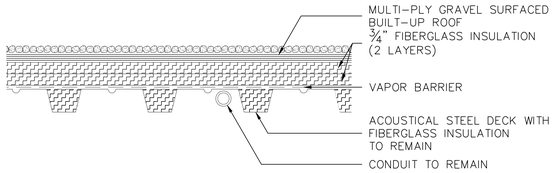

NOTES:
- EXISTING BASE FLASHINGS CONTAIN ASBESTOS. SEE G-002 AND SPECIFICATIONS FOR REQUIREMENTS.
- REMOVE AND REINSTALL EXISTING FIBERGLASS INSULATION WITHIN THE FLUTES AS REQUIRED TO CLEAN THE FLUTES.

REMOVE ALL ITEMS UNLESS DESIGNATED TO REMAIN

NEW ROOF SYSTEM CROSS SECTION

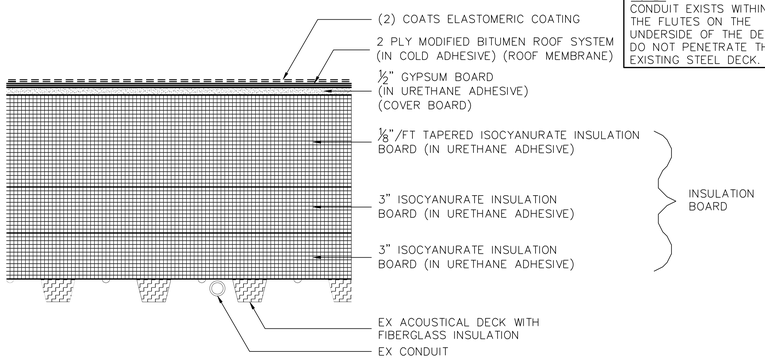

NOTE:
CONDUIT EXISTS WITHIN THE FLUTES ON THE UNDERSIDE OF THE DECK. DO NOT PENETRATE THE EXISTING STEEL DECK.

ALL ITEMS ARE NEW UNLESS DESIGNATED AS EXISTING (EX)

ALTERNATE NO. 1 ROOF SYSTEM CROSS SECTION

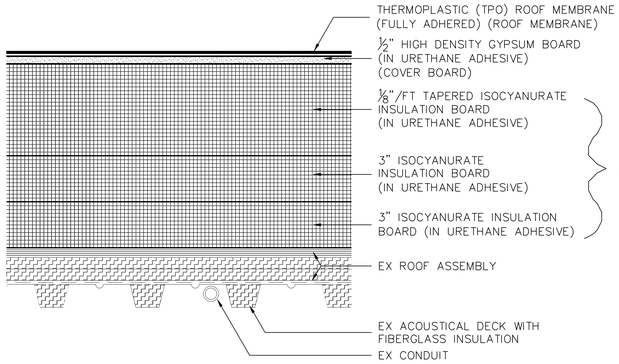

NOTES:
- REMOVE ALL EXISTING FLASHINGS AND LOOSE GRAVEL FROM EXISTING ROOF ASSEMBLY AND PROVIDE REPAIRS AS REQUIRED.
- CONDUIT EXISTS WITHIN THE FLUTES ON THE UNDERSIDE OF THE DECK. DO NOT PENETRATE THE EXISTING STEEL DECK.

ALL ITEMS ARE NEW UNLESS DESIGNATED AS EXISTING (EX)

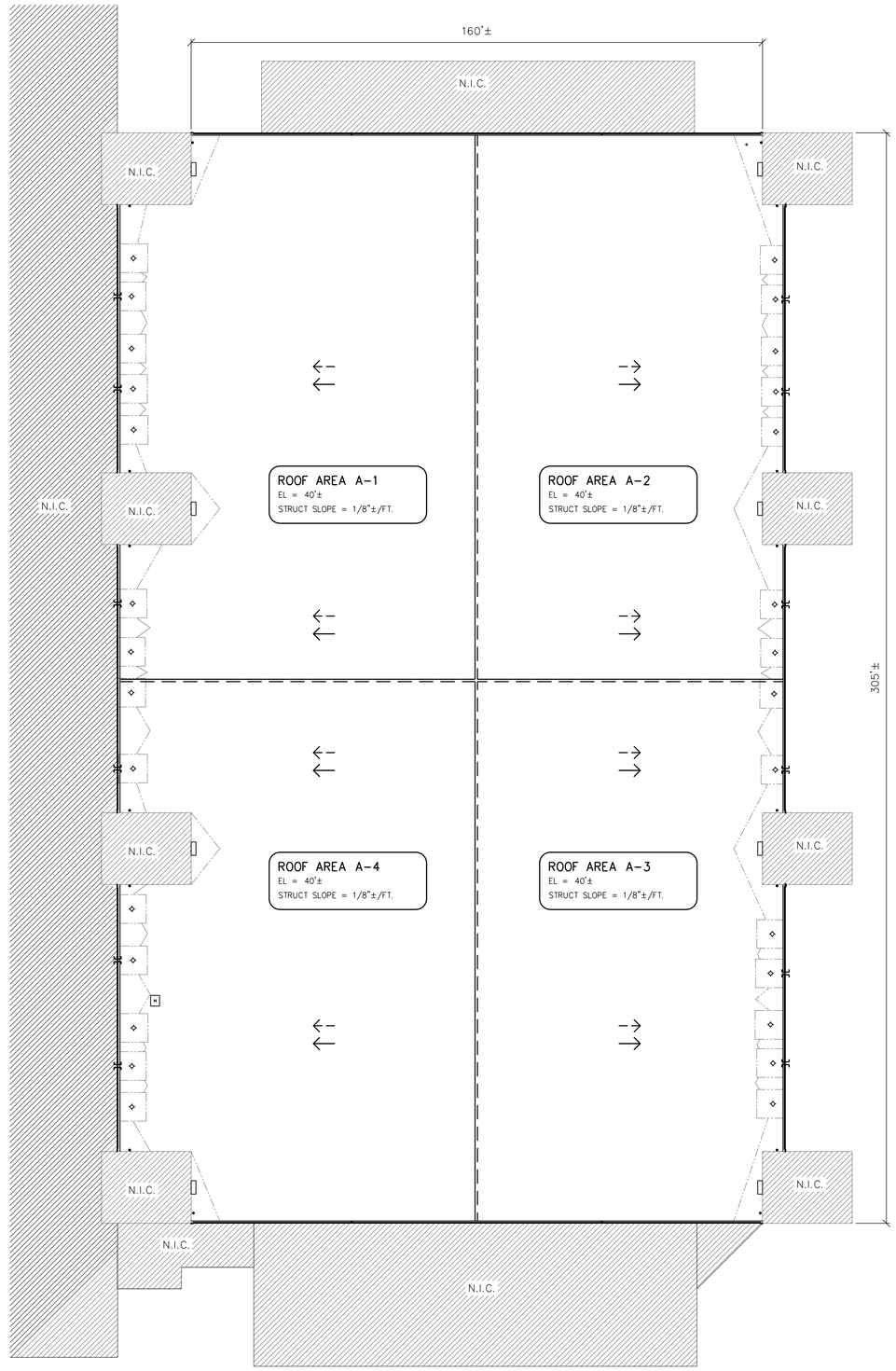

A / A100 OVERALL ROOF AREA AND CONCEPTUAL TAPERED INSULATION PLAN
SCALE: 1/16" = 1'

KEY PLAN

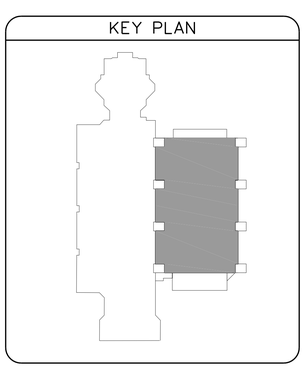

NOTES

1. PROVIDE CRICKETS AND SADDLES BETWEEN ALL ROOF DRAINS AND SCUPPERS.
2. PROVIDE 8 FOOT WIDE MIN. CRICKETS AND SADDLES UNLESS OTHERWISE INDICATED.
3. PROVIDE 8 FT X 8 FT DRAIN SUMPS AT ALL INTERIOR ROOF DRAINS AND SCUPPERS.
4. THE TAPERED LAYOUT IS CONCEPTUAL IN NATURE AND INTENDED TO PROVIDE A BASIC CONCEPT FOR BIDDING PURPOSES. THE ACTUAL LAYOUT MAY VARY FROM THAT SHOWN.

LEGEND

- CRICKET
- STRUCTURAL SLOPE
- TAPERED INSULATION SLOPE
- ROOF DRAIN WITH SUMP

GALE
Gale Associates, Inc.
Engineers Architects Planners
1122 Kenilworth Drive, Suite 206
Towson, Md 21204-2143
P 443-279-4500 F 443-279-4560
www.gainc.com
Boston Baltimore Orlando

This drawing and the design and construction features disclosed are proprietary to Gale Associates, Inc. and shall not be altered or reused in whole or part without the express written permission of Gale Associates, Inc.
Copyright©2019

PROJECT
ROOF REPLACEMENT
THOMAS JEFFERSON MIDDLE SCHOOL GYMNASIUM
125 SOUTH OLD GLEBE ROAD
ARLINGTON, VIRGINIA 22204

OWNER
ARLINGTON PUBLIC SCHOOLS
2770 SOUTH TAYLOR STREET
ARLINGTON, VIRGINIA 22206

NO.	DATE	DESCRIPTION	BY
1	2/26/2020	CD SUBMISSION	MLF

PROJECT NO.	670622
CADD FILE	670622 A1x
DESIGNED BY	SLB
DRAWN BY	MLF
CHECKED BY	SJB
DATE	2/26/2020
DRAWING SCALE	1/16" = 1'

GRAPHIC SCALE
0 8' 16' 32'
IF BORDER IS LESS THAN 40" x 28" USE GRAPHIC SCALES

SHEET TITLE
OVERALL ROOF AREA AND CONCEPTUAL TAPERED INSULATION PLAN

DRAWING NO.
A-100

O:\670622\02 DESIGN\670622 A1X.DWG - 2/26/2020 11:00:50 AM - < MLF >

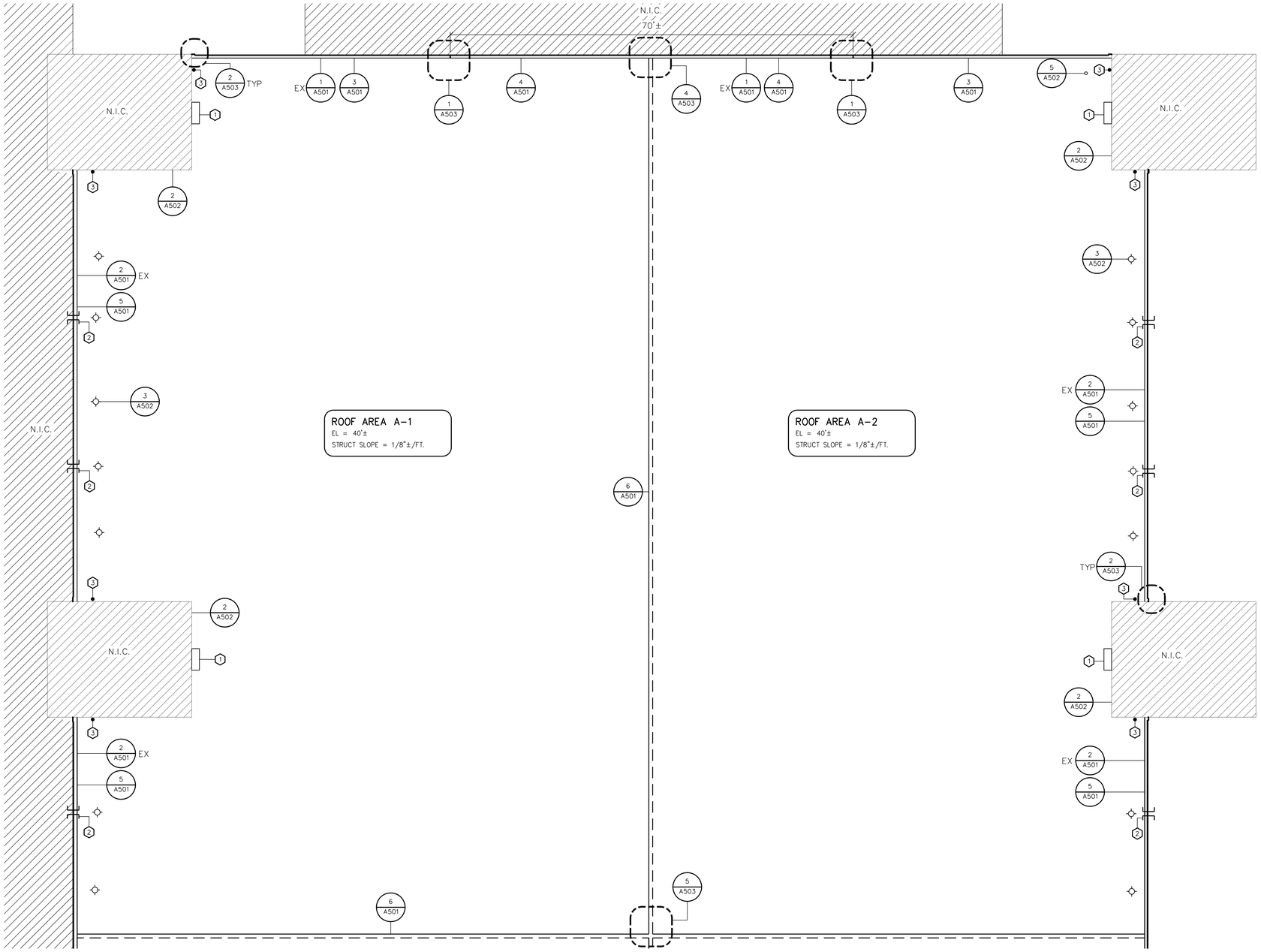

A / A101 PARTIAL ROOF AREA PLAN
SCALE: 1/8" = 1'

NORTH

KEY PLAN

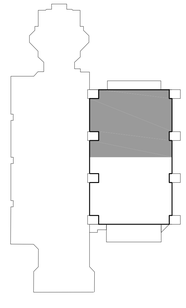

KEYNOTES

1. PROVIDE COMPOSITE WALL PANELS AND EPDM MEMBRANE ON EXISTING PLYWOOD ENCLOSURES. SEE DETAILS 1/A502, 4/A502 AND 3/A503.
2. PROVIDE NEW THROUGHWALL OVERFLOW SCUPPER. SEE DETAIL 7/A501.
3. REMOVE AND REINSTALL EXISTING SM DOWNSPOUT FROM N.I.C. ROOF AS REQUIRED. PROVIDE NEW CONCRETE SPLASH BLOCK ON WALKWAY PAD.
4. PROVIDE NEW ROOF ACCESS HATCH. SEE DETAIL 6/A502.

GALE
Gale Associates, Inc.
Engineers Architects Planners
1122 Kenilworth Drive, Suite 206
Towson, Md 21204-2143
P 443-279-4500 F 443-279-4560
www.gainc.com
Boston Baltimore Orlando

This drawing and the design and construction features disclosed are proprietary to Gale Associates, Inc. and shall not be altered or reused in whole or part without the express written permission of Gale Associates, Inc.
Copyright©2019

COMMONWEALTH OF VIRGINIA
STEVEN J. BOHREN
Lic. No. 46187
PROFESSIONAL ENGINEER

PROJECT
ROOF REPLACEMENT
THOMAS JEFFERSON MIDDLE SCHOOL GYMNASIUM
125 SOUTH OLD GLEBE ROAD
ARLINGTON, VIRGINIA 22204

OWNER
ARLINGTON PUBLIC SCHOOLS
2770 SOUTH TAYLOR STREET
ARLINGTON, VIRGINIA 22206

NO.	DATE	DESCRIPTION	BY
1	2/26/2020	CD SUBMISSION	MLF

PROJECT NO.	670622
CADD FILE	670622 A1x
DESIGNED BY	SLB
DRAWN BY	MLF
CHECKED BY	SJB
DATE	2/26/2020
DRAWING SCALE	1/8" = 1'

GRAPHIC SCALE
0 4' 8' 16'
IF BORDER IS LESS THAN 40" x 28" USE GRAPHIC SCALES

SHEET TITLE
PARTIAL ROOF AREA PLAN

DRAWING NO.
A-101

O:\670622\02 DESIGN\670622 A1X.DWG - 2/26/2020 11:00:50 AM - < MLF >

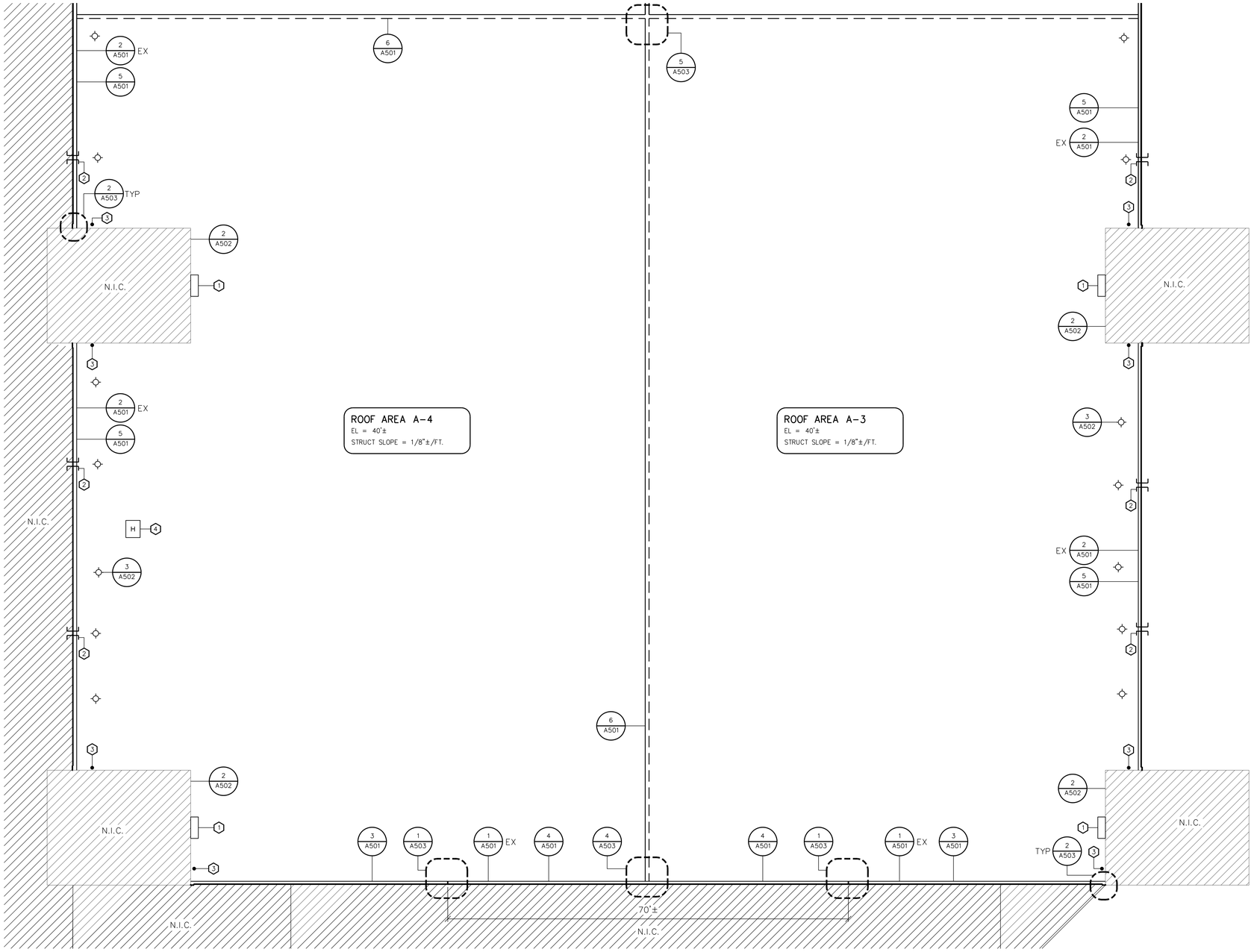

A102 PARTIAL ROOF AREA PLAN
SCALE: 1/8" = 1'

NORTH

KEY PLAN

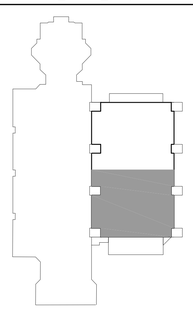

KEYNOTES

1. PROVIDE COMPOSITE WALL PANELS AND EPDM MEMBRANE ON EXISTING PLYWOOD ENCLOSURES. SEE DETAILS 1/A502, 4/A502 AND 3/A503.
2. PROVIDE NEW THROUGHWALL OVERFLOW SCUPPER. SEE DETAIL 7/A501.
3. REMOVE AND REINSTALL EXISTING SM DOWNSPOUT FROM N.I.C. ROOF AS REQUIRED. PROVIDE NEW CONCRETE SPLASH BLOCK ON WALKWAY PAD.
4. PROVIDE NEW ROOF ACCESS HATCH. SEE DETAIL 6/A502.

GALE

Gale Associates, Inc.
Engineers Architects Planners

1122 Kenilworth Drive, Suite 206
Towson, Md 21204-2143
P 443-279-4500 F 443-279-4560
www.gainc.com

Boston Baltimore Orlando

This drawing and the design and construction features disclosed are proprietary to Gale Associates, Inc. and shall not be altered or reused in whole or part without the express written permission of Gale Associates, Inc.
Copyright©2019

COMMONWEALTH OF VIRGINIA
STEVEN J. BOHLEN
LICENSE NO. 0402 026 948
PROFESSIONAL ENGINEER

PROJECT
ROOF REPLACEMENT
THOMAS JEFFERSON MIDDLE SCHOOL GYMNASIUM
125 SOUTH OLD GLEBE ROAD
ARLINGTON, VIRGINIA 22204

OWNER
ARLINGTON PUBLIC SCHOOLS
2770 SOUTH TAYLOR STREET
ARLINGTON, VIRGINIA 22206

NO.	DATE	DESCRIPTION	BY
1	2/26/2020	CD SUBMISSION	MLF

PROJECT NO.	670622
CADD FILE	670622 A1x
DESIGNED BY	SLB
DRAWN BY	MLF
CHECKED BY	SJB
DATE	2/26/2020
DRAWING SCALE	1/8" = 1'

GRAPHIC SCALE
0 4' 8' 16'
IF BORDER IS LESS THAN 40" x 28" USE GRAPHIC SCALES

SHEET TITLE
PARTIAL ROOF AREA PLAN

DRAWING NO.
A-102

O:\670622\02 DESIGN\670622 A1X.DWG - 2/26/2020 11:00:51 AM - < MLF >

DETAILS – EXISTING CONDITIONS

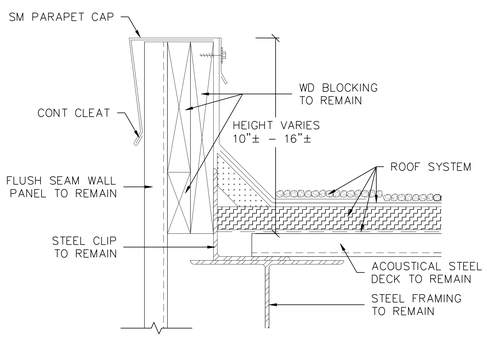

1 A501 PARAPET
SCALE: 3" = 1'

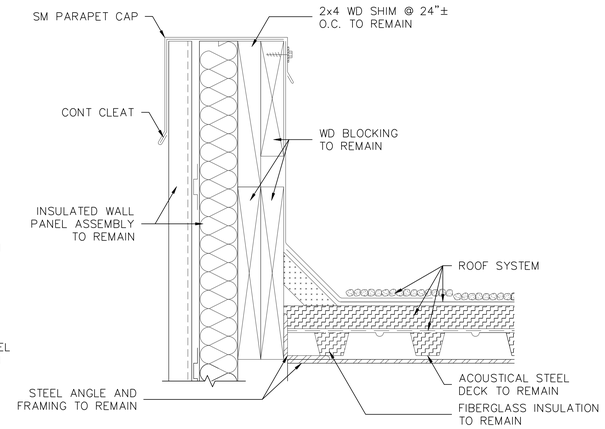

2 A501 PARAPET
SCALE: 3" = 1'

REMOVE ALL ITEMS UNLESS DESIGNATED TO REMAIN

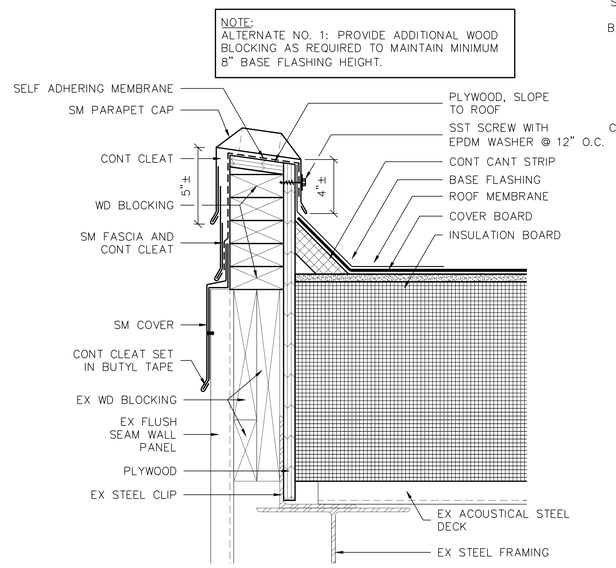

3 A501 PARAPET
SCALE: 3" = 1'

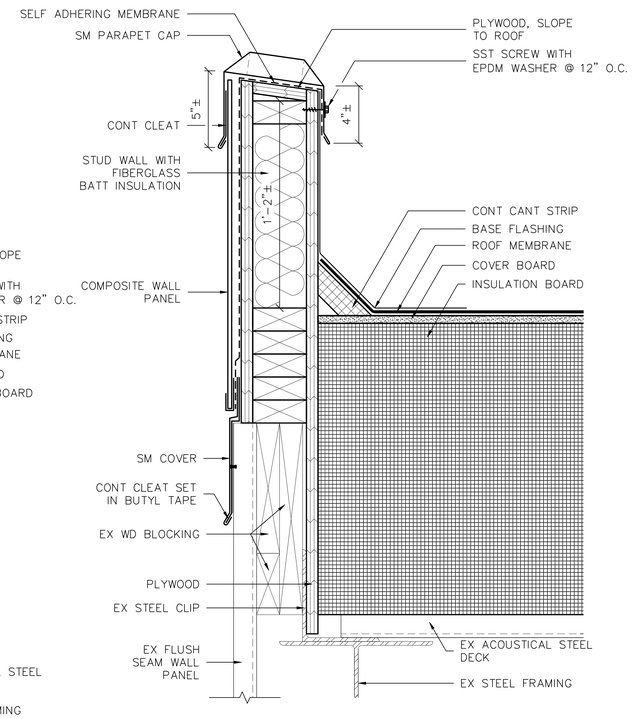

4 A501 PARAPET AT HIGH POINT
SCALE: 3" = 1'

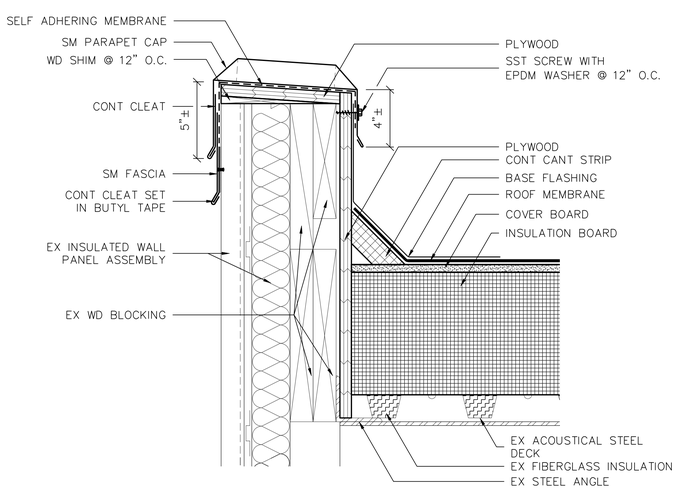

5 A501 PARAPET
SCALE: 3" = 1'

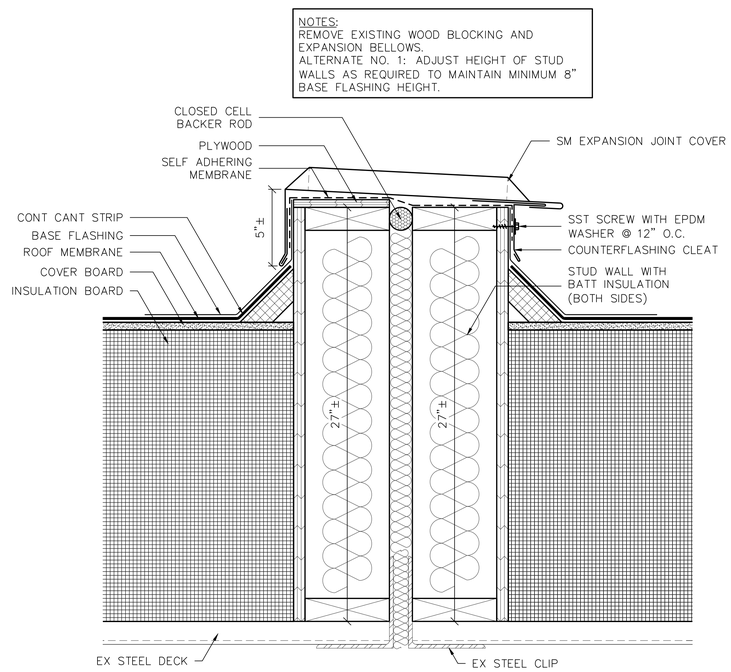

6 A501 EXPANSION JOINT
SCALE: 3" = 1'

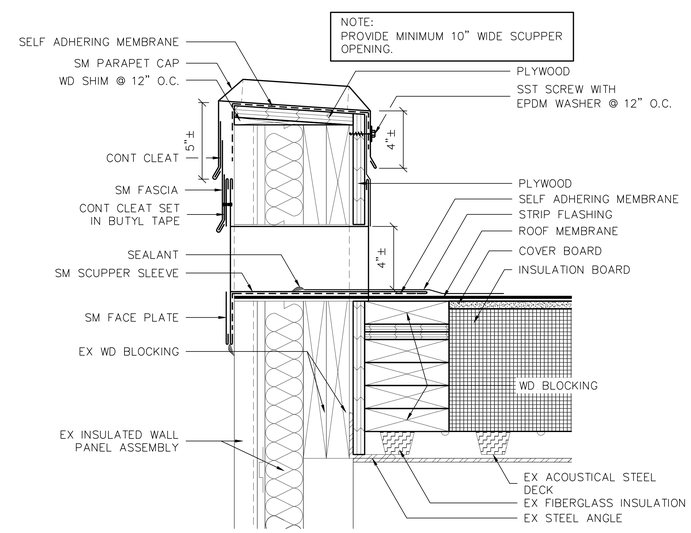

7 A501 OVERFLOW SCUPPER
SCALE: 3" = 1'

ALL ITEMS ARE NEW UNLESS DESIGNATED AS EXISTING (EX)

GALE
Gale Associates, Inc.
Engineers Architects Planners
1122 Kenilworth Drive, Suite 206
Towson, Md 21204-2143
P 443-279-4500 F 443-279-4560
www.gainc.com
Boston Baltimore Orlando

This drawing and the design and construction features disclosed are proprietary to Gale Associates, Inc. and shall not be altered or reused in whole or part without the express written permission of Gale Associates, Inc.
Copyright©2019

COMMONWEALTH OF VIRGINIA
STEVEN J. BOHEN
LICENSED PROFESSIONAL ENGINEER

PROJECT
ROOF REPLACEMENT
THOMAS JEFFERSON MIDDLE SCHOOL GYMNASIUM
125 SOUTH OLD GLEBE ROAD
ARLINGTON, VIRGINIA 22204

OWNER
ARLINGTON PUBLIC SCHOOLS
2770 SOUTH TAYLOR STREET
ARLINGTON, VIRGINIA 22206

NO.	DATE	DESCRIPTION	BY
1	2/26/2020	CD SUBMISSION	MLF

PROJECT NO.	670622
CADD FILE	670622 A5x
DESIGNED BY	SLB
DRAWN BY	MLF
CHECKED BY	SJB
DATE	2/26/2020
DRAWING SCALE	3" = 1'

GRAPHIC SCALE
0 3" 6" 9"
IF BORDER IS LESS THAN 40" x 28" USE GRAPHIC SCALES

SHEET TITLE
DETAILS EXISTING CONDITIONS AND NEW CONSTRUCTION

DRAWING NO.
A–501

O:\670622\02 DESIGN\670622 A5X.DWG - 2/26/2020 11:00:54 AM - < MLF >

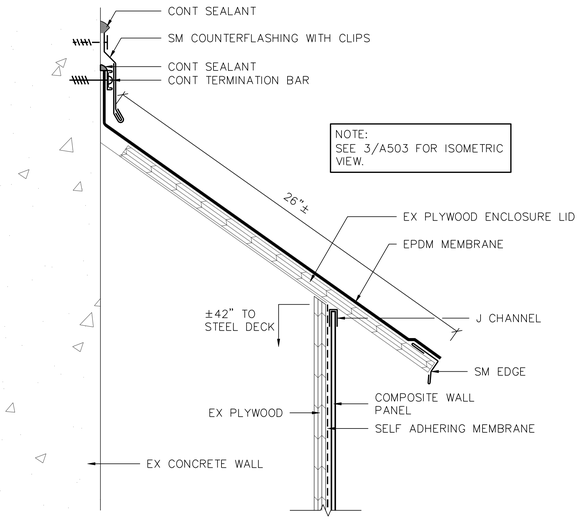

1 A502 PLYWOOD ENCLOSURE
SCALE: 3" = 1'

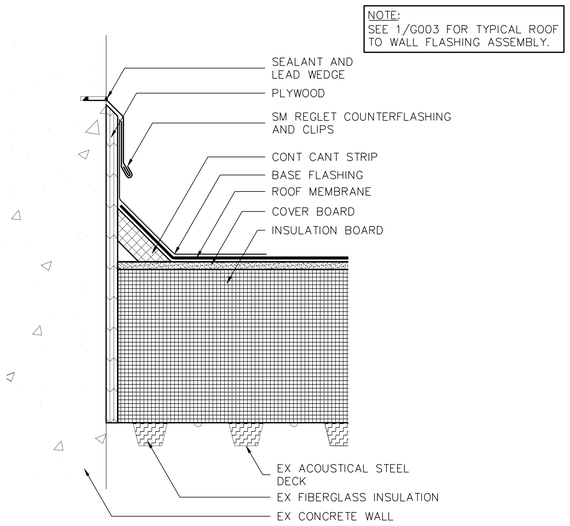

2 A502 ROOF TO WALL
SCALE: 3" = 1'

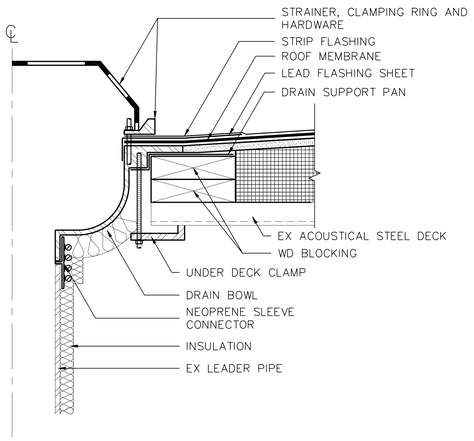

3 A502 DRAIN
SCALE: 3" = 1'

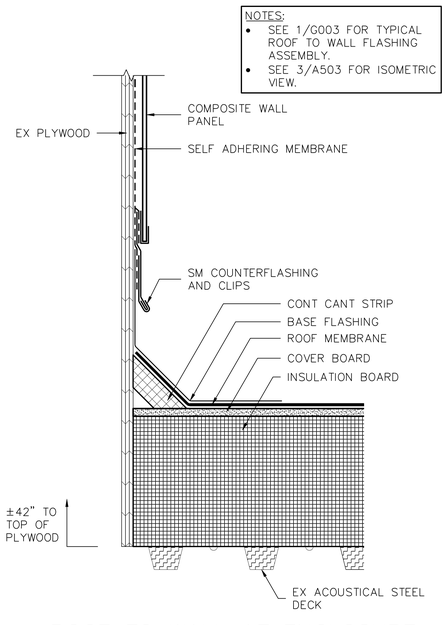

4 A502 ROOF TO WALL AT ENCLOSURE
SCALE: 3" = 1'

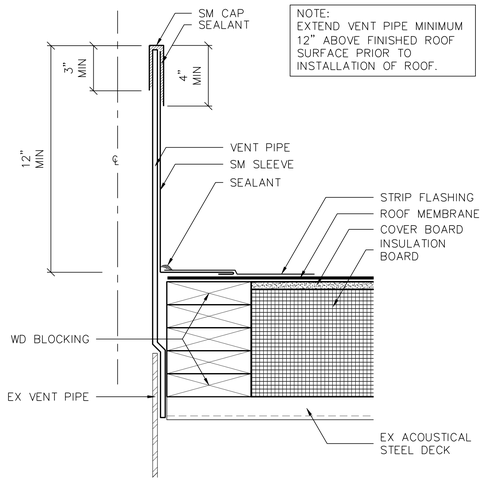

5 A502 VENT PIPE
SCALE: 3" = 1'

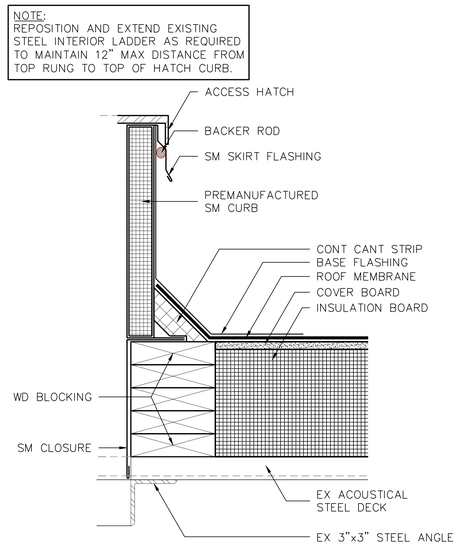

6 A502 ROOF HATCH
SCALE: 3" = 1'

ALL ITEMS ARE NEW UNLESS DESIGNATED AS EXISTING (EX)

GALE
Gale Associates, Inc.
Engineers Architects Planners
1122 Kenilworth Drive, Suite 206
Towson, Md 21204-2143
P 443-279-4500 F 443-279-4560
www.gainc.com
Boston Baltimore Orlando

This drawing and the design and construction features disclosed are proprietary to Gale Associates, Inc. and shall not be altered or reused in whole or part without the express written permission of Gale Associates, Inc.
Copyright©2019

COMMONWEALTH OF VIRGINIA
STEVEN J. BOHN
LICENSED
PROFESSIONAL ENGINEER

PROJECT
ROOF REPLACEMENT
THOMAS JEFFERSON MIDDLE SCHOOL GYMNASIUM
125 SOUTH OLD GLEBE ROAD
ARLINGTON, VIRGINIA 22204

OWNER
ARLINGTON PUBLIC SCHOOLS
2770 SOUTH TAYLOR STREET
ARLINGTON, VIRGINIA 22206

NO.	DATE	DESCRIPTION	BY
1	2/26/2020	CD SUBMISSION	MLF

PROJECT NO.	670622
CADD FILE	670622 A5x
DESIGNED BY	SLB
DRAWN BY	MLF
CHECKED BY	SJB
DATE	2/26/2020
DRAWING SCALE	3" = 1'

GRAPHIC SCALE
0 3" 6" 9"
IF BORDER IS LESS THAN 40" x 28" USE GRAPHIC SCALES

SHEET TITLE
DETAILS
NEW
CONSTRUCTION

DRAWING NO.
A-502

D:\670622\02 DESIGN\670622 A5X.DWG - 2/26/2020 11:00:55 AM - < MLF >

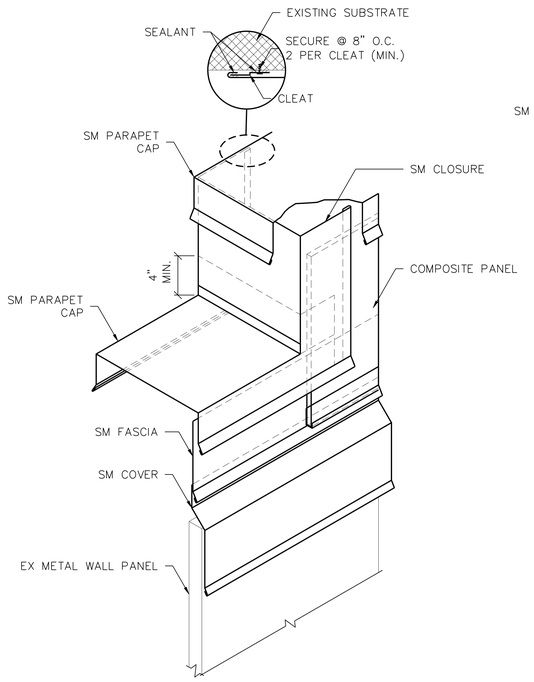

1 A503 PARAPET HEIGHT TRANSITION
SCALE: NOT TO SCALE

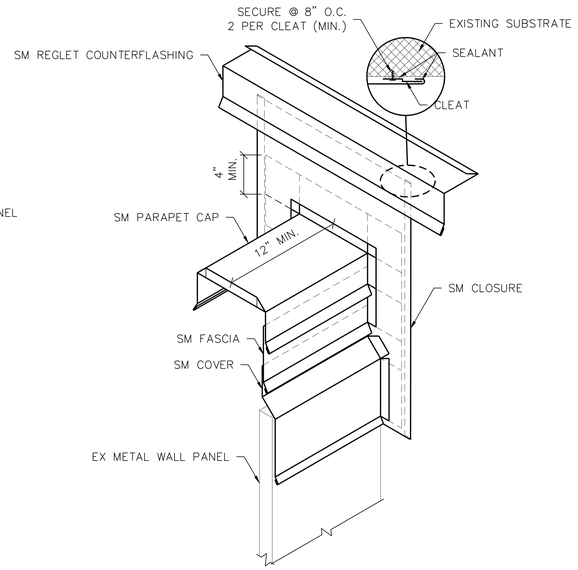

2 A503 PARAPET CAP AT WALL
SCALE: NOT TO SCALE

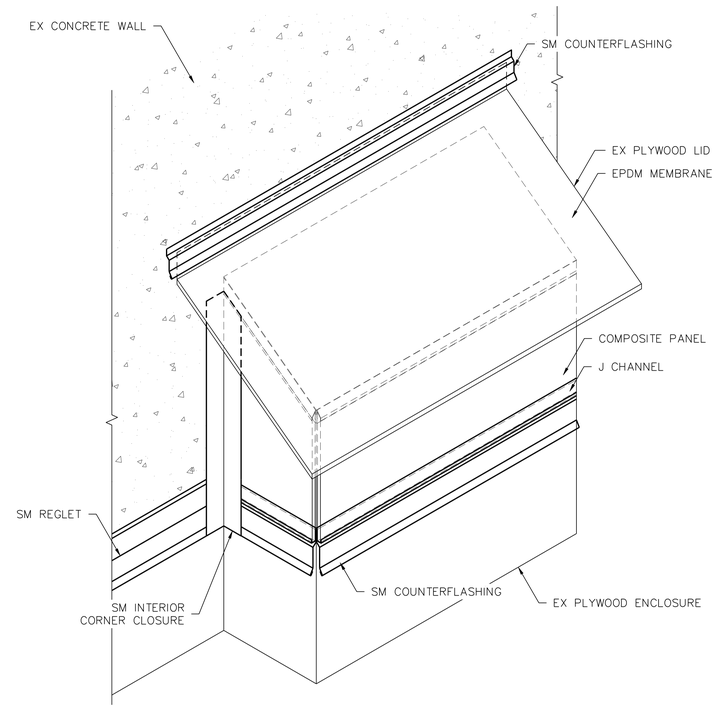

3 A503 PLYWOOD ENCLOSURE
SCALE: NOT TO SCALE

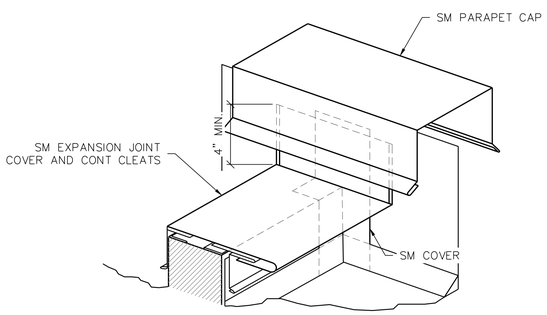

4 A503 EXPANSION JOINT TO PARAPET CAP
SCALE: NOT TO SCALE

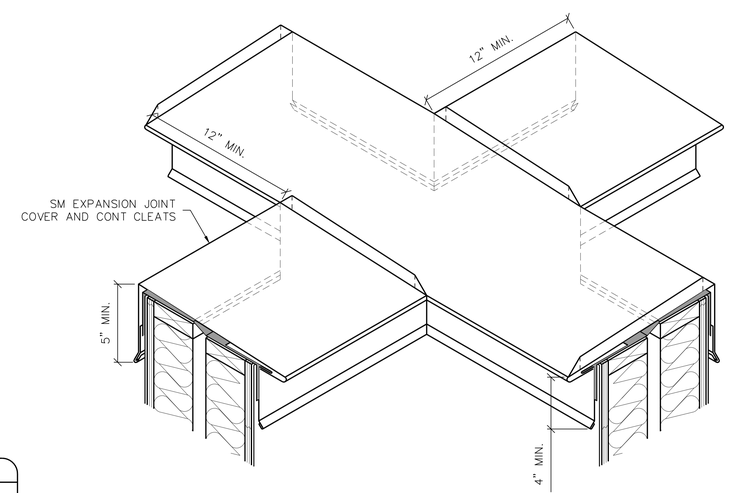

5 A503 EXPANSION JOINT TRANSITION
SCALE: NOT TO SCALE

NOTES

- ISOMETRIC DETAILS ARE PROVIDED FOR TO CONVEY ADDITIONAL INFORMATION RELATED TO MATERIAL CONNECTIONS OR ASSEMBLY WHERE NEEDED OR REQUIRED AT TRANSITIONS.
- REFER TO DETAIL DRAWINGS SPECIFICATIONS FOR REQUIRED MATERIALS.
- SCALE, REFERENCES AND NOTES ARE FOR CONCEPTUAL PURPOSES ONLY.
- ACTUAL CONFIGURATIONS AND TRANSITIONS MAY DIFFER WITH VARYING SITE CONDITIONS. FIELD VERIFY ALL DIMENSIONS PRIOR TO FABRICATION.

ALL ITEMS ARE NEW UNLESS DESIGNATED AS EXISTING (EX)

GALE
Gale Associates, Inc.
Engineers Architects Planners
1122 Kenilworth Drive, Suite 206
Towson, Md 21204-2143
P 443-279-4500 F 443-279-4560
www.gainc.com
Boston Baltimore Orlando

This drawing and the design and construction features disclosed are proprietary to Gale Associates, Inc. and shall not be altered or reused in whole or part without the express written permission of Gale Associates, Inc.
Copyright©2019

PROJECT
ROOF REPLACEMENT
THOMAS JEFFERSON MIDDLE SCHOOL GYMNASIUM
125 SOUTH OLD GLEBE ROAD
ARLINGTON, VIRGINIA 22204

OWNER
ARLINGTON PUBLIC SCHOOLS
2770 SOUTH TAYLOR STREET
ARLINGTON, VIRGINIA 22206

NO.	DATE	DESCRIPTION	BY
1	2/26/2020	CD SUBMISSION	MLF

PROJECT NO.	670622
CADD FILE	670622 A5x
DESIGNED BY	SLB
DRAWN BY	MLF
CHECKED BY	SJB
DATE	2/26/2020
DRAWING SCALE	NOT TO SCALE

GRAPHIC SCALE
0 3" 6" 9"
IF BORDER IS LESS THAN 40" x 28" USE GRAPHIC SCALES

SHEET TITLE
SHEET METAL ISOMETRIC DETAILS

DRAWING NO.
A-503

O:\670622\02 DESIGN\670622 A5X.DWG - 2/26/2020 11:00:56 AM - < MLF >

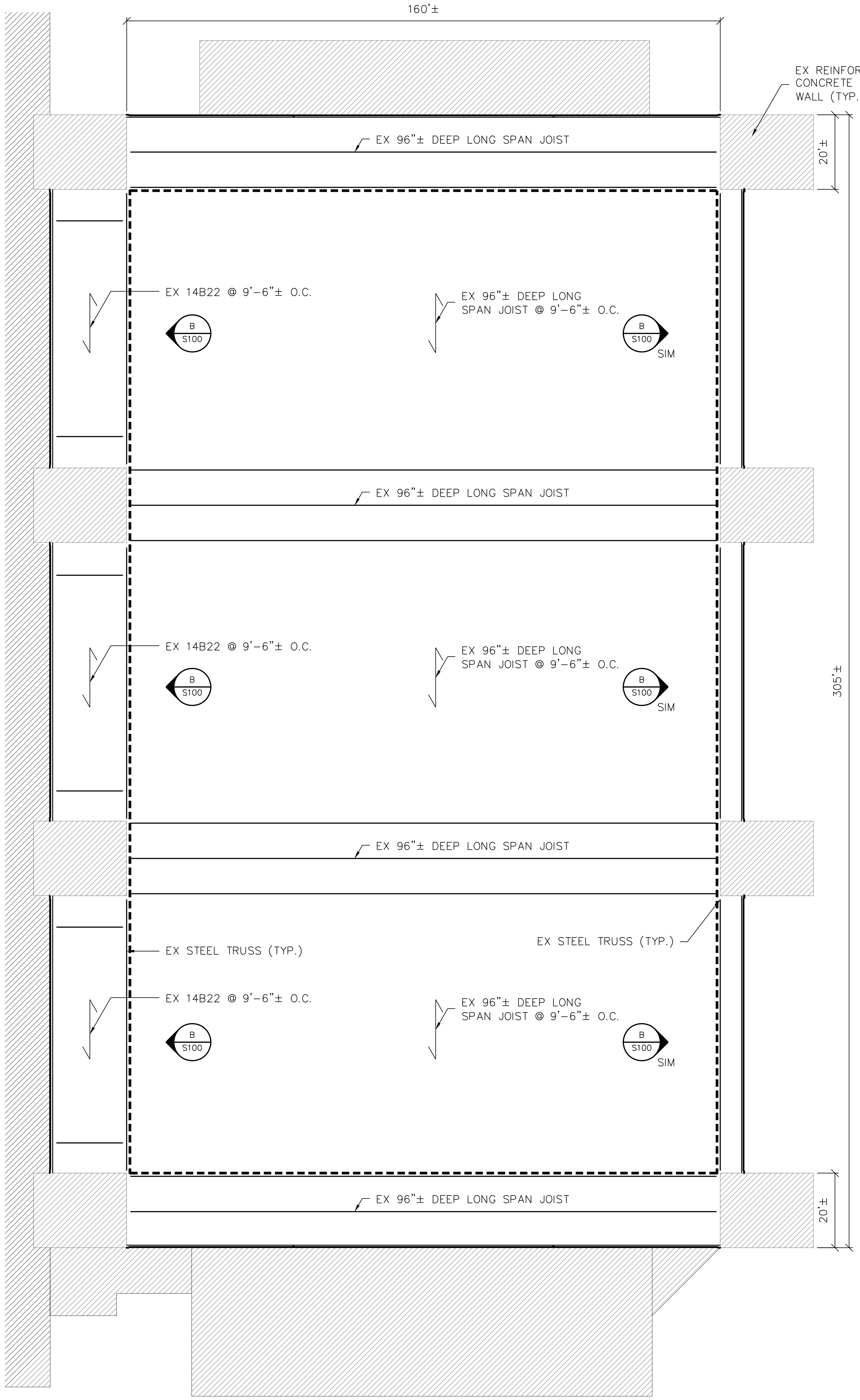

A S100 ROOF FRAMING PLAN
SCALE: 1/16" = 1'

KEY PLAN

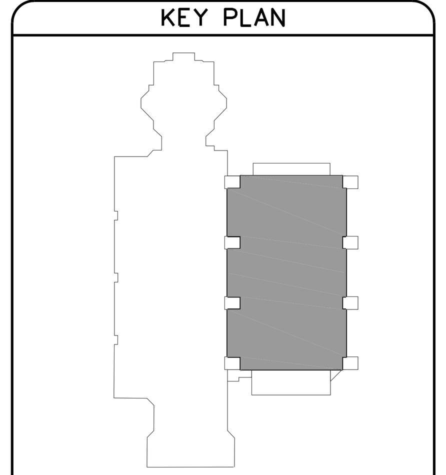

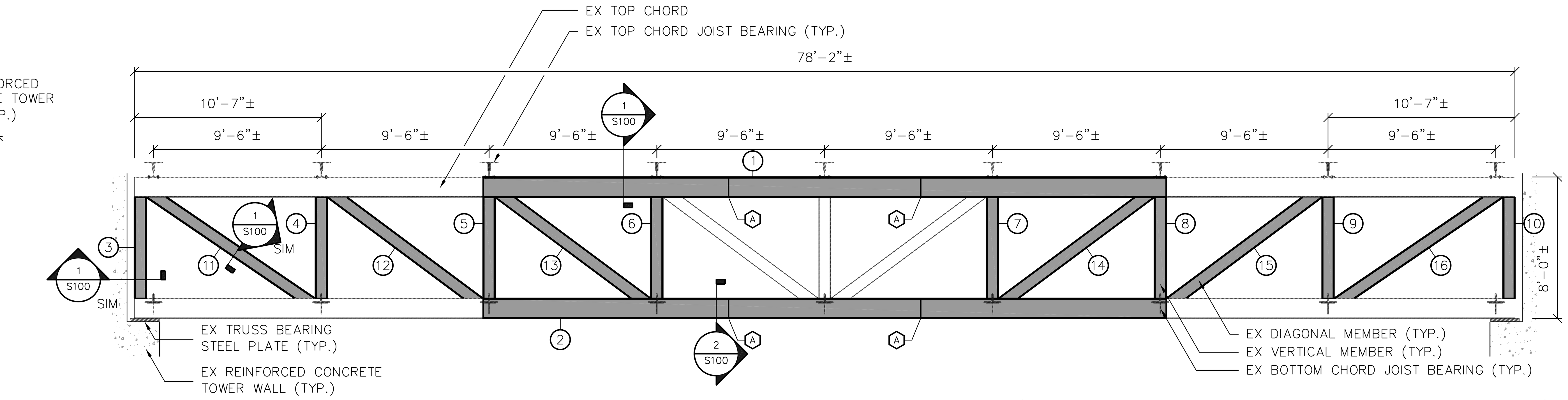

B S100 EX STEEL TRUSS – TYP. OF 6
SCALE: 1/4" = 1'

LEGEND

(shaded bar)	TRUSS MEMBER TO BE REINFORCED
(#)	TRUSS MEMBER REPAIR NUMBER (REFER TO TRUSS MEMBER REPAIR SCHEDULE)
(dashed line)	LIMITS OF CONSIDERATION FOR PHOTOVOLTAIC PANEL ARRAY PLACEMENT AT ROOF LEVEL NOT TO EXCEED 10 PSF. OWNER SHALL CONTACT THE ENGINEER PRIOR TO INSTALLING ANY PV PANEL ASSEMBLIES OUTSIDE OF THESE LIMITS, OR WITH A UNIFORM WEIGHT GREATER THAN 10 PSF.

KEYNOTES

(A) PROVIDE CJP SPLICE IN NEW STEEL PLATE AS REQUIRED. LOCATIONS SHOWN ARE SCHEMATIC IN NATURE. WHEN REQUIRED, SPLICES SHALL NOT OCCUR AT PANEL POINTS OR WITHIN 1/3 THE DISTANCE BETWEEN PANEL POINTS.

(B) PROVIDE CJP WELD AT MEMBER END JOINTS OF VERTICAL AND DIAGONAL MEMBERS ONLY TO CONNECT NEW STEEL PLATE(S) TO EXISTING TOP CHORD FLANGES.

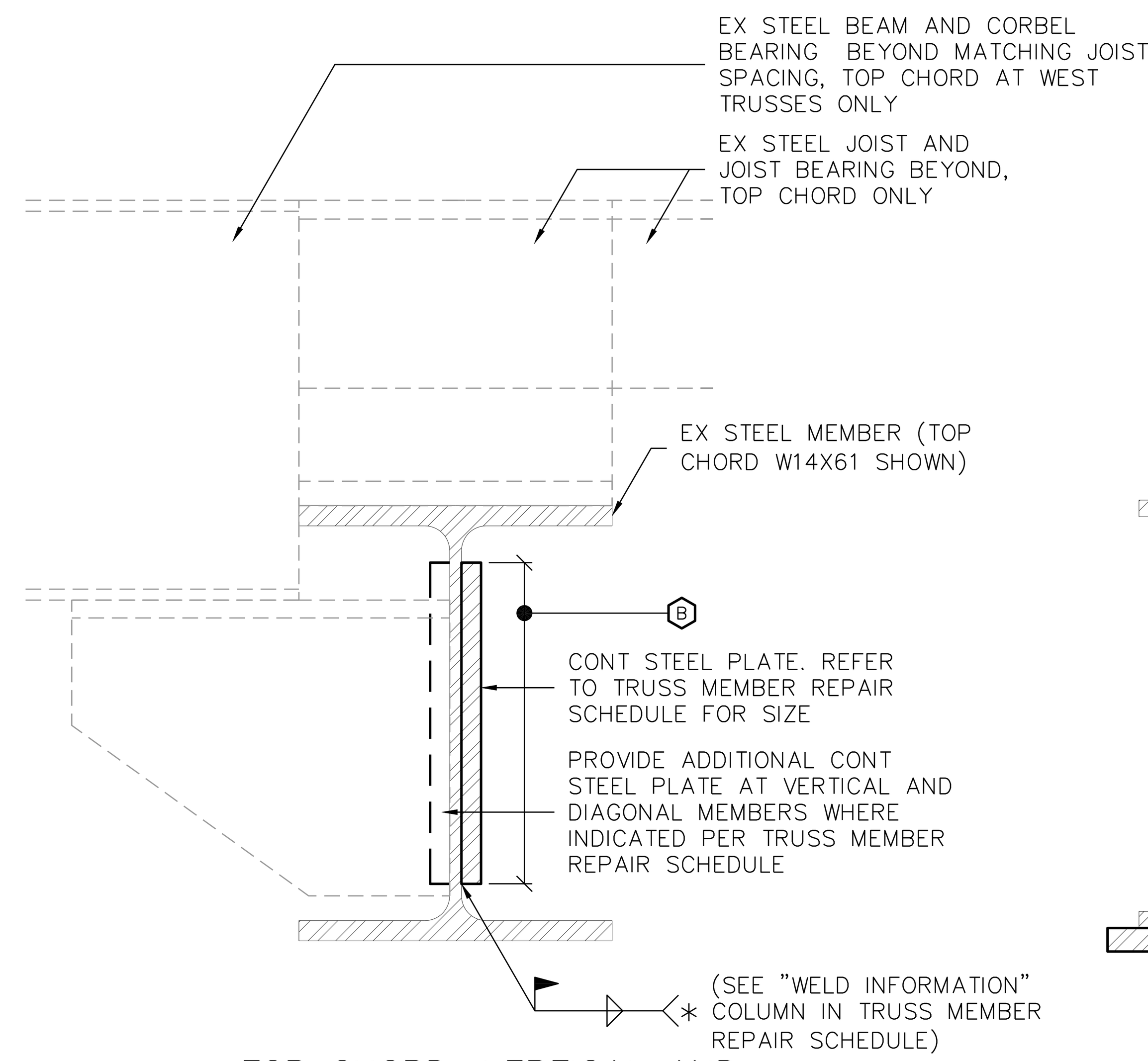

1 S100 TOP CHORD, VERTICAL AND DIAGONAL MEMBER REPAIRS
SCALE: 3" = 1'

NOTE:
REFER TO TRUSS MEMBER REPAIR SCHEDULE FOR EXISTING MEMBER DESIGNATION AND REQUIRED PLATE DIMENSIONS, MATERIAL, AND WELDING NOTES.

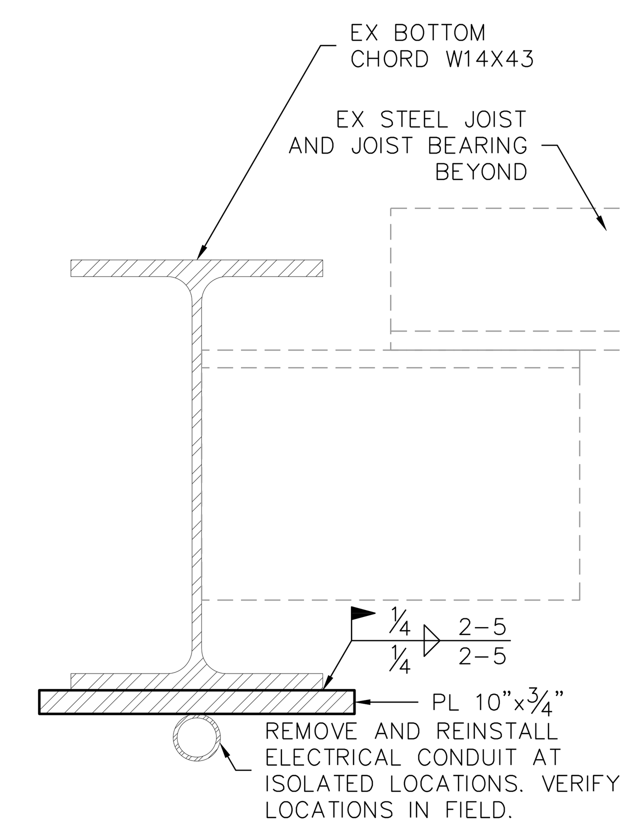

2 S100 BOTTOM CHORD REPAIR
SCALE: 3" = 1'

TRUSS MEMBER REPAIR SCHEDULE

		New Steel				
Member No.	Exisiting Member	New Steel Plate(s)	Fy (ksi)	ASTM Designation	Repair Detail	* Weld Information
1	W14x61	PL 10 1/4 x 5/8	50	A572, Gr. 50	1/S100	1/4 2-5 / 1/4 2-5
2	W14x43	PL 10 x 3/4	50	A572, Gr. 50	2/S100	1/4 2-5 / 1/4 2-5
3	W8x28	(2) PL 5 1/2 x 1/2	50	A572, Gr. 50	1/S100	1/4 2-5 / 1/4 2-5
4	W8x24	(2) PL 5 1/2 x 1/2	50	A572, Gr. 50	1/S100	1/4 2-5 / 1/4 2-5
5	W8x20	PL 5 1/2 x 9/16	50	A572, Gr. 50	1/S100	1/4 2-5 / 1/4 2-5
6	W8x17	PL 5 1/2 x 9/16	36	A36	1/S100	1/4 2-5 / 1/4 2-5
7	W8x17	PL 5 1/2 x 9/16	36	A36	1/S100	1/4 2-5 / 1/4 2-5
8	W8x20	PL 5 1/2 x 9/16	50	A572, Gr. 50	1/S100	1/4 2-5 / 1/4 2-5
9	W8x24	(2) PL 5 1/2 x 1/2	50	A572, Gr. 50	1/S100	1/4 2-5 / 1/4 2-5
10	W8x28	(2) PL 5 1/2 x 1/2	50	A572, Gr. 50	1/S100	1/4 2-5 / 1/4 2-5
11	W8x28	PL 5 1/2 x 3/8	50	A572, Gr. 50	1/S100	1/4 2-5 / 1/4 2-5
12	W8x20	PL 5 1/2 x 3/8	50	A572, Gr. 50	1/S100	1/4 2-5 / 1/4 2-5
13	W8x17	PL 5 1/2 x 3/8	36	A36	1/S100	1/4 2-5 / 1/4 2-5
14	W8x17	PL 5 1/2 x 3/8	36	A36	1/S100	1/4 2-5 / 1/4 2-5
15	W8x20	PL 5 1/2 x 3/8	50	A572, Gr. 50	1/S100	1/4 2-5 / 1/4 2-5
16	W8x28	PL 5 1/2 x 3/8	50	A572, Gr. 50	1/S100	1/4 2-5 / 1/4 2-5

NOTE:
ALTERNATE SHAPES AND/OR PLATE SIZES MAY BE ALTERED WITH ENGINEER APPROVAL ONLY. ALTERNATES SHALL MEET OR EXCEED THE CROSS SECTIONAL AREA SHOWN IN THE TABLE IN ORDER TO BE CONSIDERED.

GENERAL NOTES

1. STRUCTURAL DRAWINGS ARE ONLY PART OF THE CONTRACT DOCUMENTS AND SHALL BE USED IN CONJUNCTION WITH PROJECT SPECIFICATIONS AND ARCHITECTURAL DRAWINGS. REFER TO ARCHITECTURAL DRAWINGS FOR DIMENSIONS, AND/OR ELEVATIONS NOT SHOWN ON THE STRUCTURAL DRAWINGS.
2. DESIGN REQUIREMENTS AS INDICATED ON BOTH THE SPECIFICATIONS AND DRAWINGS, OR ON EITHER ONE ONLY, SHALL BE FOLLOWED ENTIRELY. WHERE COMPLIANCE WITH TWO OR MORE STANDARDS WITH CONFLICTING REQUIREMENTS ARE SPECIFIED, THE MORE STRINGENT REQUIREMENT SHALL BE APPLIED.
3. VERIFY ALL DISCREPANCIES AND CONFLICTING INFORMATION ON DRAWINGS WITH THE ENGINEER.
4. ALL DIMENSIONS, ELEVATIONS AND CONDITIONS RELATED TO EXISTING CONDITIONS SHALL BE FIELD VERIFIED, AND ANY DISCREPANCIES SHALL BE BROUGHT TO THE ATTENTION OF THE ENGINEER BEFORE PROCEEDING WITH THE WORK.
5. COMPLY WITH THE SPECIFICATIONS FOR ALL QUALIFICATION AND SUBMITTAL REQUIREMENTS PERTAINING TO STRUCTURAL STEEL FABRICATION AND ERECTION. QUALIFICATIONS AND SUBMITTALS ARE SUBJECT TO ENGINEER APPROVAL.
6. SHOP DRAWINGS SHALL BE PROVIDED TO THE ENGINEER FOR REVIEW AND APPROVAL PRIOR TO FABRICATION AND/OR CONSTRUCTION. CONTRACTOR SHALL REVIEW ALL SHOP DRAWINGS PRIOR TO SUBMITTING TO THE ENGINEER.
7. TEMPORARY BRACING, SHORING, BARRIERS, COVERINGS, INTERIOR PROTECTION OR ANY WORK THAT MAY BE REQUIRED TO PROTECT THE EXISTING ADJACENT CONSTRUCTION, UTILITIES, FIXTURES, FLOORING, ETC. AND THE OCCUPANTS SHALL BE PROVIDED BY THE CONTRACTOR. CONTRACTOR SHALL BE RESPONSIBLE FOR RESTORING ALL GROUNDS/ADJACENT CONSTRUCTION TO THE AFFECTED WORK AREAS DAMAGED AS RESULT OF THE WORK.
8. DETAILS, SECTIONS, AND NOTES ON THE DRAWINGS ARE INTENDED TO BE APPLIED TO SIMILAR CONDITIONS ELSEWHERE UNLESS NOTED OTHERWISE.
9. THE INTERIOR SPACE(S) AFFECTED BY THE CONSTRUCTION MAY BE OCCUPIED DURING CONSTRUCTION. THE OWNER INTENDS THAT THE INTERIOR WORK SHOWN ON THE STRUCTURAL DRAWINGS BE COMPLETED IN FOUR (4) PHASES (SUBJECT TO CHANGE) SO AS TO LIMIT INTERRUPTION TO BUILDING OCCUPANTS. CONTRACTOR SHALL PROVIDE A PHASING PLAN AND SCHEDULE WHICH CLEARLY SHOWN THE LIMITS OF AFFECTED AREAS FOR EACH PHASE IN RELATION TO THE EXISTING FLOOR PLAN FOR REVIEW AND APPROVAL BY THE OWNER PRIOR TO ANY CONSTRUCTION.

STRUCTURAL STEEL NOTES

1. ALL STRUCTURAL STEEL MATERIALS, WORKMANSHIP, AND DETAILS, SHALL CONFORM TO THE LATEST EDITION OF THE ANSI/AISC 360 "SPECIFICATION FOR THE STRUCTURAL STEEL BUILDINGS" AND AISC "CODE OF STANDARD PRACTICE FOR STEEL BUILDINGS AND BRIDGES". STRUCTURAL STEEL SHALL CONFORM TO THE FOLLOWING SPECIFICATIONS.
   - STRUCTURAL STEEL PLATES: ASTM A36 OR A572, AS INDICATED ON THESE DRAWINGS
2. ALL WELDING SHALL BE PERFORMED BY AWS CERTIFIED WELDERS. CERTIFICATIONS MUST BE CURRENT AND "TYPE" OR "CATEGORY" SPECIFIC WHEN WELDING IS PERFORMED.
3. ALL STEEL SHALL BE NEW STEEL CONFORMING TO THE AISC SPECIFICATIONS FOR DESIGN, FABRICATION AND ERECTION OF STRUCTURAL STEEL FOR BUILDINGS.
4. ALL WELDS SHALL DEVELOP THE FULL STRENGTH OF THE MATERIAL BEING WELDED. USE EXX 70 ELECTRODES.
5. MEMBER SPLICE LOCATIONS MAY BE SELECTED BY THE CONTRACTOR, BUT SHALL NOT OCCUR WITHIN 1/3 THE DISTANCE BETWEEN PANEL POINTS. ALL SPLICES SHALL BE CJP WELDED.
6. NO PERMANENT CONNECTIONS SHOULD BE MADE UP UNTIL THE STRUCTURE HAS BEEN PROPERLY ALIGNED. PROVIDE TEMPORARY BRACING AS REQUIRED.
7. SUBMIT SHOP DRAWINGS TO THE ENGINEER SHOWING SETTING PLANS, ERECTION PLANS, AND ALL DETAILS AND SIZES OF MEMBERS INCLUDING CONNECTIONS.
8. ALL NEW STEEL SHALL BE SHOP-PRIMED IN ACCORDANCE WITH THE SPECIFICATIONS. NEW SURFACES TO BE FIELD-WELDED SHALL NOT INLCUDE A PRIMER (FIELD OR SHOP) WITHIN 2-INCHES OF FIELD-WELD PRIOR TO WELDING.
9. EXISTING SURFACES TO RECEIVE BUILT-UP STEEL REPAIRS SHALL HAVE EXISTING COATINGS REMOVED PRIOR TO ERECTION PER THE SPECIFICATIONS.
10. NEW AND EXISTING STEEL MEMBERS SHALL RECEIVE NEW PAINT COATINGS WHERE INDICATED PER THE SPECIFICATIONS.
11. TOUCH UP ALL WELDS, SCRATCHES OR SCRAPES IN PAINT (IN NEW AND EXISTING STEEL MEMBERS WHERE AFFECTED) AFTER ERECTION.
12. STRUCTURAL STEEL FABRICATION AND ERECTION SHALL BE SUBJECTED TO SPECIAL INSPECTIONS AND TESTS AS DESIGNATED IN THE SPECIFICATIONS.

GALE

Gale Associates, Inc.
Engineers Architects Planners

1122 Kenilworth Drive, Suite 206
Towson, Md 21204-2143
P 443-279-4500 F 443-279-4560
www.gainc.com

Boston Baltimore Orlando

This drawing and the design and construction features disclosed are proprietary to Gale Associates, Inc. and shall not be altered or reused in whole or part without the express written permission of Gale Associates, Inc.
Copyright©2019

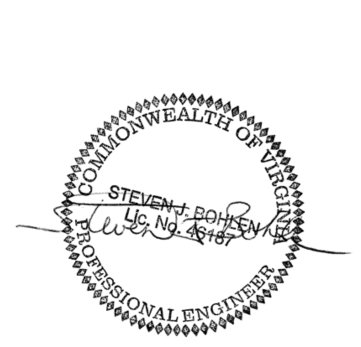

PROJECT
ROOF REPLACEMENT
THOMAS JEFFERSON MIDDLE SCHOOL GYMNASIUM
125 SOUTH OLD GLEBE ROAD
ARLINGTON, VIRGINIA 22204

OWNER
ARLINGTON PUBLIC SCHOOLS
2770 SOUTH TAYLOR STREET
ARLINGTON, VIRGINIA 22206

NO.	DATE	DESCRIPTION	BY
1	2/26/2020	CD SUBMISSION	MLF

PROJECT NO.	670622
CADD FILE	670622 A1x
DESIGNED BY	SLB
DRAWN BY	MLF
CHECKED BY	SJB
DATE	2/26/2020
DRAWING SCALE	AS NOTED

GRAPHIC SCALE

IF BORDER IS LESS THAN 40" x 28" USE GRAPHIC SCALES

SHEET TITLE

FRAMING PLAN AND STRUCTURAL DETAILS

DRAWING NO.

S-100

O:\670622\02 DESIGN\670622 A1X.DWG - 2/26/2020 11:01:00 AM - < MLF >

APPENDIX A

It is preferred that the mailing label, as found below be used:

PLEASE COMPLETE THE LABEL BELOW AND ATTACH IT TO THE OUTSIDE OF THE ENVELOPE:

✂ ✂ ✂ ✂ ✂ ✂ ✂ ✂ ✂ ✂ ✂ ✂

Sealed Bid

ITB No. 17FY20 Title: Jefferson Middle Gym Roof Replacement

Bid Closing Date/Time: Monday, March 23, 2020 Prior to 10:00 A.M.

From:

Name of Bidder: _____

Address of Bidder: _____

_____

Commonwealth of Virginia Class A Contractor's License # _____

Contractor's License Expiration Date: _____

IF THIS INFORMATION IS NOT CONTAINED ON THE OUTSIDE OF THE ENVELOPE THE BID WILL BE DEEMED NON-RESPONSIVE AND WILL NOT BE CONSIDERED FOR CONTRACT AWARD.

Deliver To:

Arlington Public Schools
Syphax Education Center
Procurement Office
Attn: Dyanna McMullen
2110 Washington Blvd., 4th Floor
Arlington, VA 22204